Modular Heatless Desiccant Air Dryers

FLOW CAPACITY: 5.1 to 1886 Nm³/hr

“With the requirement for Class 1.2.1 air for compressed air coming in contact with products for human consumption, we turned to nano as we needed complete confidence in our equipment requirements.”

Baby food manufacturer - UK

Clean, dry compressed air is essential for efficient and reliable manufacturing. Untreated ambient air contains moisture, dust, and contaminants that can cause corrosion, bacterial growth, and equipment failure, leading to increased maintenance, downtime, and product spoilage. While filters remove particles and liquids, they can’t eliminate moisture vapor, which condenses as air temperature and pressure change.

Desiccant air dryers effectively remove this moisture by using a drying agent to lower the dew point, making them ideal for critical or low-temperature applications. They protect systems from corrosion, ensure compliance with strict air quality standards, and help maintain product quality. With improved reliability and reduced energy waste, desiccant dryers boost operational efficiency and cut long-term costs.

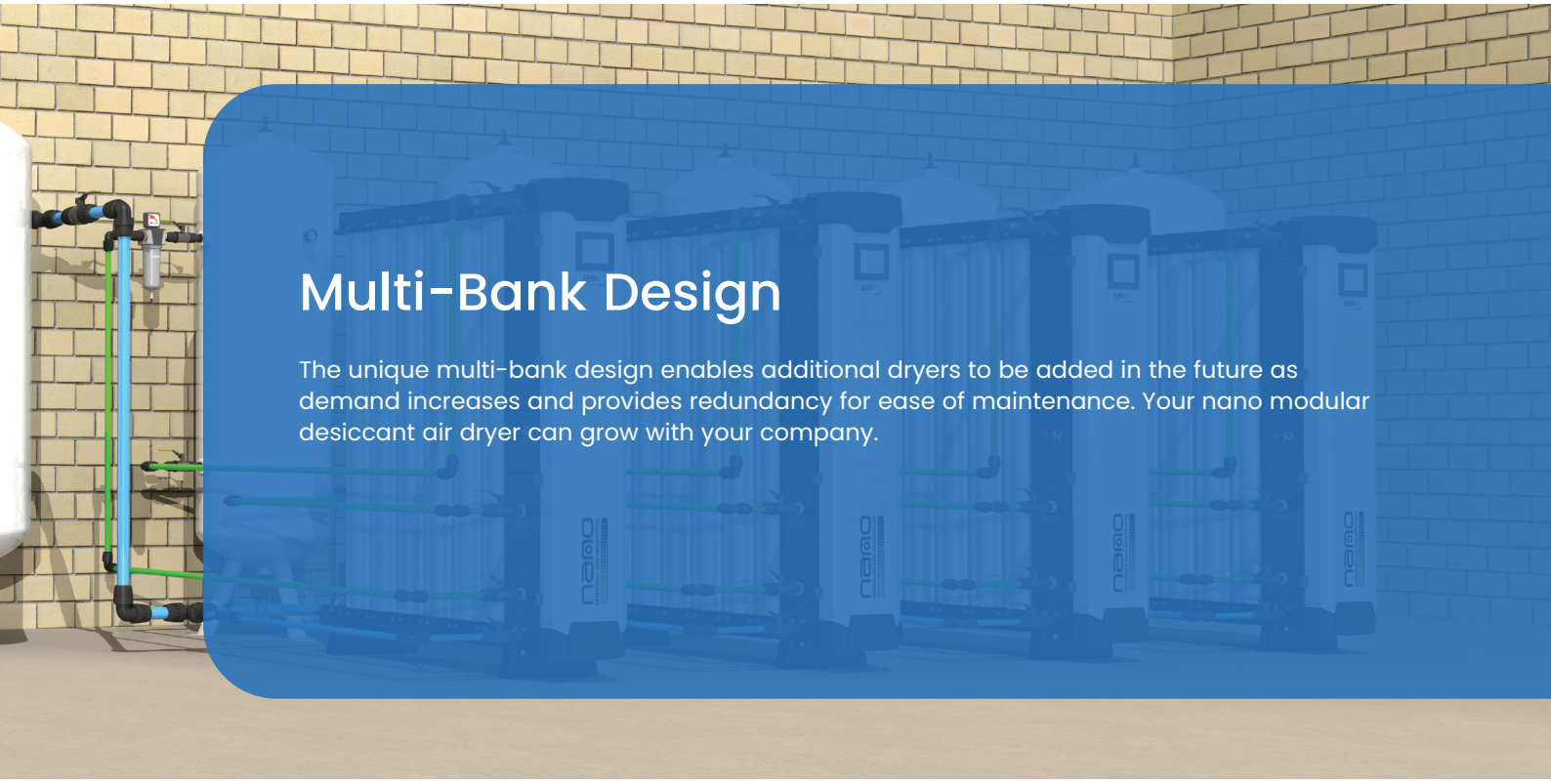

Multi-Bank Design

The unique multi-bank design enables additional dryers to be added in the future as demand increases and provides redundancy for ease of maintenance. Your nano modular desiccant air dryer can grow with your company.

nano D[1|2|3] Modular Desiccant Compressed Air Dryers

- Removal of water vapour by lowering the pressure dew point of your compressed air stream to -40°C (-70°C optional) to ensure a continuous supply of dry air.
- Low pressure drop and consistent dew point performance
- Modular design allows installation in spaces too small for a traditional dryer.
- Premium controller option
- Ease of service with patented, pre-assembled snowstorm filled desiccant and built in after filter cartridges on D[1] (NDL 010 to NDL 050) and D[2] (NDL 060 to NDL 130) ranges.
- Low noise during the exhaust and regeneration cycle
- Energy saving option available
- Many other options available to suit your installation.

Features

Reliable High Performance Valves

- D^1 Series (NDL 010 to NDL 050) use integrated check valves and two pilot operated solenoid valves for proven performance and reliability.
- D^2 Series (NDL 060 to NDL 130) use four pilot operated solenoid valves.
- D^3 Series (NDL 2110 to NDL 6130), Inlet, exhaust and outlet air are controlled using coaxial flow valves integrated into the upper and lower manifolds provide unrestricted flow capacity and designed for durability, ease of maintenance and long service life.

Patented Combined Filter & Desiccant Cartridges

- High density snowstorm filled desiccant provides maximum adsorption capacity.
- Built in outlet filtration to eliminate the cost, pressure drop and maintenance associated with a separate after filter.
- Easy to replace cartridges simplify maintenance requirements D^1 & D^2 (NDL 010 to NDL 130).

PLC Controlled

- Operated by a robust and reliable PLC control system offering valuable features including 'power on', 'hours run' and 'service required' indicators memory retention built into the PLC enables the controller to pick up where it left off in the drying cycle, ensuring consistently clean, dry air downstream.

Floor or Wall Mounted

- Can be floor or wall mounted - simply by rotating the feet 90 (standard on D^1, optional on D^2).

Unique Exhaust Air Silencers

- Significantly reduces noise level during depressurisation and purge cycles.

Constant Flow and Pressure

- Columns are repressurised before switching columns to ensure uninterrupted compressed air and consistent air pressure. Equalisation also ensures long desiccant life due to minimised desiccant attrition.

Tower Gauges

- Standard on models D^2 & D^3 (NDL 060 and larger)

Built In After Filtration

- Built in 1.0 micron after filter included as standard

Maximum Corrosion Protection

- High tensile aluminium columns are alocrom protected then externally powder coated to provide maximum protection for corrosive environments.

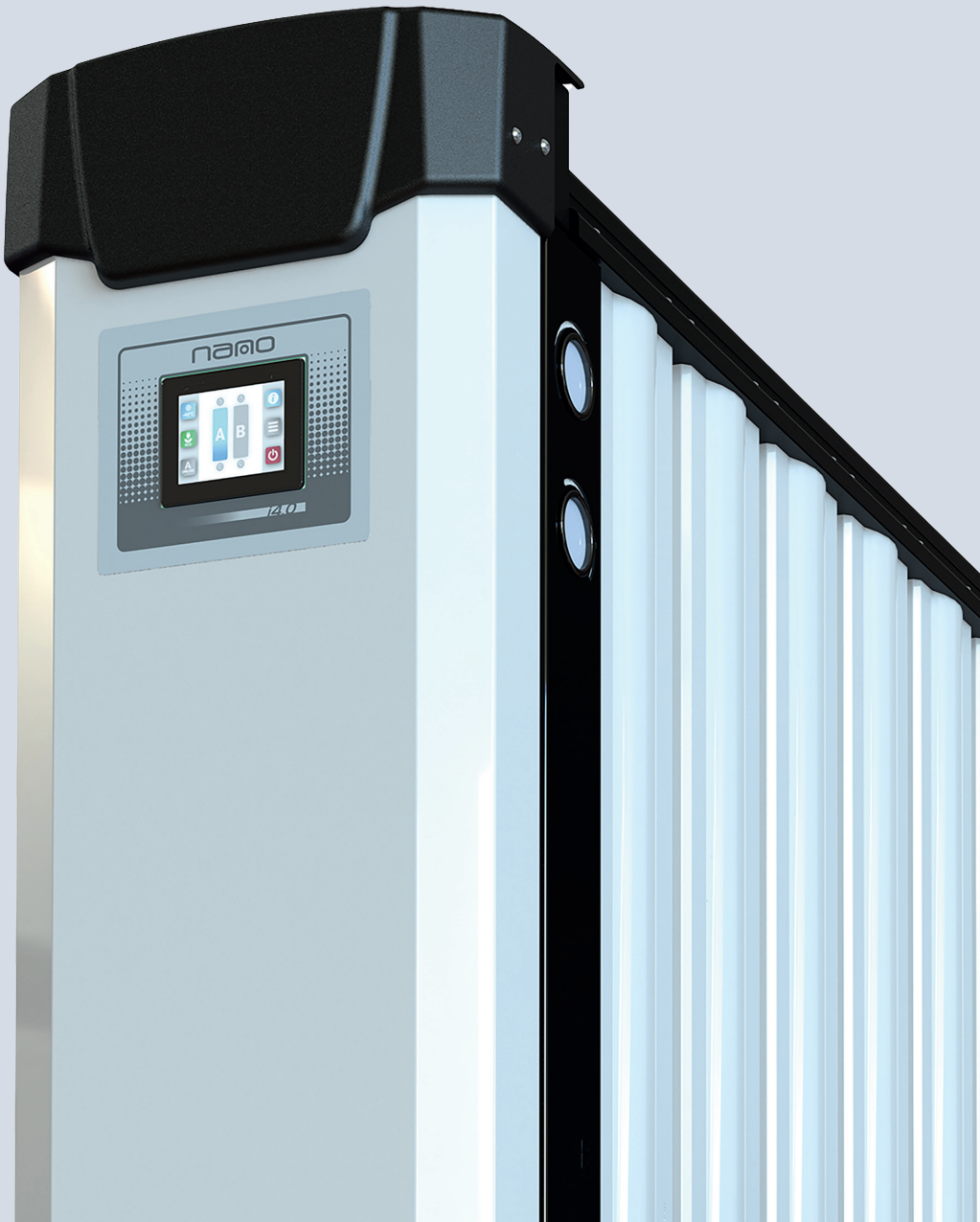

Benefits

Complete range to suit any requirement

- 20 models available with flow rates from 5.1 to 1886 Nm^3/h
- Designed for use in compressor room, point of application or integrated into original equipment.

Guaranteed Performance

- In accordance with ISO 8573.1:2010, Class 2 dirt (1 micron) and Class 2 water (-40°C pressure dew point). Class 1 water (-70°C) as an option.

Easy to install space Saving Design

- The compact design allows installation in spaces too small for a twin tower design.
- Easy to install & ready for use, the D^1 includes brackets for either, D^2 require an additional mounting kit for either floor or wall mounting.

Simplicity of Service

- Patented, pre-assembled snowstorm filled desiccant cartridges (D^1 & D^2) can be serviced in less than 15 minutes.
- Snowstorm filled columns with a built in 1 micron after filter (D^3)

High Quality Construction

- 100% tested for leaks, proper operation and dew point performance.

Warranty

- Backed by a 2 year product warranty.

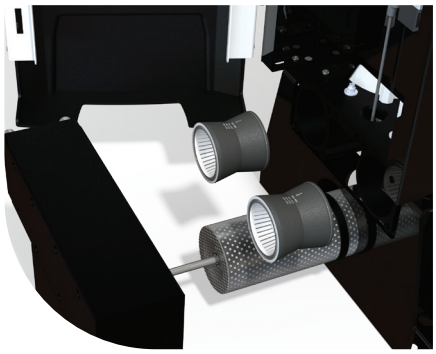

Reliable, High Performance Valves

Floor or Wall Mounted

Patented Combined Filter & Desiccant Cartridges

Optional Upgrades

HMI Communications Upgrade

- An electronics upgrade with the latest colour HMI display allows multilingual access to Modbus TCP communication, web portal monitoring, real time dew point display and a host of other functions such as manual valve operation for troubleshooting, service details and remote start/stop activation.

Energy Saving Dew Point Control

- With this option, a dew point sensor and display is incorporated into the dryer providing the ultimate in energy savings.
- The outlet dew point is continuously monitored, and if it rises above the target level, the dryer automatically shuts down until drying is required again—conserving both air and energy.
- Easily retrofitted in the field (D^2 & D^3 only.

Other

- 16 barg (MAWP) for higher pressure applications.
- Pneumatic controls; for safe operation, in remote locations where power is either limited or unavailable (available in D^2 and D^3 ranges).

How it works

Efficiently dry compressed air

The nano D[1|2|3] modular desiccant air dryers use the pressure swing adsorption principle to efficiently dry compressed air. They use a heatless twin tower configuration housed in a modular design. Each column contains a unique (and patented) desiccant cartridge which incorporates outlet filtration.

1. 0.01 micron pre-filter (external, supplied separately) removes all particulate, liquid water and oil aerosols to 0.01 ppm.
2. Clean, saturated air enters the dryer is a directed into Column A.
3. Compressed air travels through Column A for 2 minutes and moisture vapour is adsorbed to -40°C PDP or better.
4. A final built-in filter removes particulate to 1.0 micron or better.
5. ~20% purge air expands through an orifice and regenerates Column B.
6. After 30 seconds, the purge exhaust valve closes and Column B repressurises and is ready for adsorption to begin.
7. At the 2-minute mark (fixed cycle), Column A exhaust valve opens to regenerate. A PLC controls all operations.
8. Compressed air is costly, but nano dryers can be equipped with an energy-saving system to help reduce both air usage and operating expenses. By monitoring the actual pressure dew point, the PLC halts dryer cycling when the dew point is below the target, cutting down on compressor energy consumption, minimising purge air waste, and reducing valve wear.

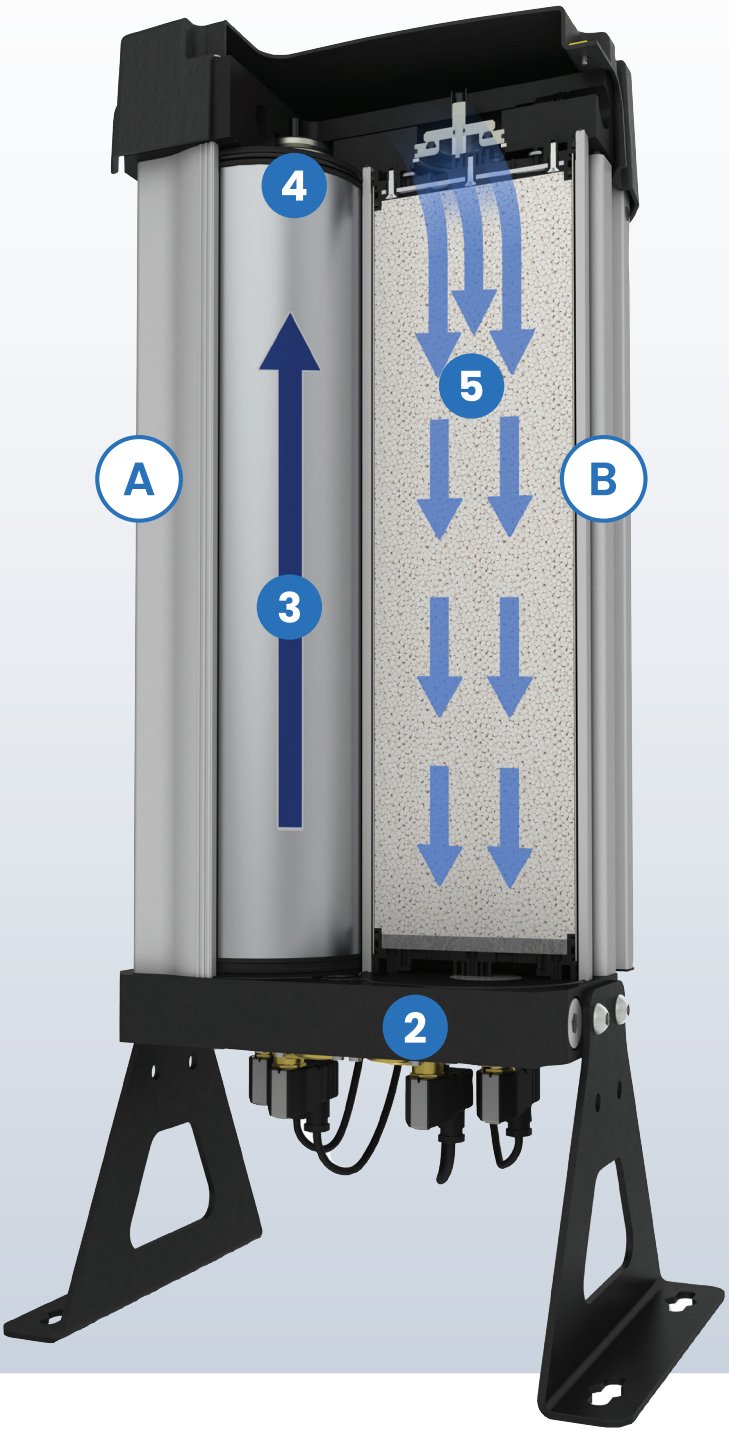

Product Specifications

MODEL	SERIES	INLET & OUTLET (1)	RATED FLOW (1)	DIMENSIONS (mm)			WEIGHT	FILTRATION (3)	
		BSSP	Nm^3/h	A	B	C	kg	PRE FILTERS	PRE FILTER
NDL 010	D^1	⅜"	5.1	439	222	220	9.0	GFNB 0006 M1/M01	integrated
NDL 020	D^1	⅜"	8.5	439	222	220	9.0	GFNB 0006 M1/M01	integrated
NDL 030	D^1	⅜"	17	649	222	220	13.5	GFNB 0015 M1/M01	integrated
NDL 040	D^1	⅜"	26	899	330	280	18.5	GFNB 0015 M1/M01	integrated
NDL 050	D^1	½"	33	1199	330	280	25.5	GFNB 0025 M1/M01	integrated
NDL 060	D^2	1"	58	743	426	283	47	GFNB 0050 M1/M01	integrated
NDL 070	D^2	1"	70	743	426	283	47	GFNB 0050 M1/M01	integrated
NDL 080	D^2	1"	90	923	426	283	58	GFNB 0070 M1/M01	integrated
NDL 090	D^2	1"	112	923	426	283	58	GFNB 0070 M1/M01	integrated
NDL 100	D^2	1"	150	1098	426	283	71	GFNB 0105 M1/M01	integrated
NDL 110	D^2	1"	180	1248	426	283	83	GFNB 0125 M1/M01	integrated
NDL 120	D^2	1"	224	1498	426	283	96	GFNB 0175 M1/M01	integrated
NDL 130	D^2	1"	301	1848	426	283	118	GFNB 0175 M1/M01	integrated
NDL 2110	D^3	2"	360	1271	400	682	97	GFNB 0280 M1/M01	-
NDL 2120	D^3	2"	469	1521	400	682	179	GFNB 0280 M1/M01	-
NDL 2130	D^3	2"	680	1871	400	682	261	GFNB 0450 M1/M01	-
NDL 3130	D^3	2"	951	1871	400	850	249	GFNB 0700 M1/M01	-
NDL 4130	D^3	2 ½"	1274	1871	400	1018	331	GFNB 0850 M1/M01	-
NDL 6120	D^3	2 ½"	1407	1521	400	1354	439	GFNB 0850 M1/M01	-
NDL 6130	D^3	2 ½"	1886	1871	400	1354	623	GFNB 1250 M1/M01	-

SPECIFICATIONS	STANDARD	OPTIONAL
Maximum particle size (ISO Class) (4)	class 2 (1 micron)	class 1 (0.01 micron) (5)
Maximum water content (ISO Class) (4)	class 2 (-40°C pdp)	class 1 (-70°C)
Minimum operating pressure (barg) (6)	4	-
Maximum operating pressure (barg)	16 (D^1/D^2) 10 (D^3)(6)	16 (D^3)
Recommended operating temp range (°C)	1.5 to 35	-
Design operating temperature range (°C)	1.5 to 50	
Power supply requirements	85 to 264V AC 50/60 Hz	24V DC

PRESSURE CORRECTION FACTORS (5)												
Operating pressure (barg)	4	5	6	7	8	9	10	11	12	13	14	16
Correction factor	0.63	0.75	0.88	1.00	1.13	1.25	1.38	1.50	1.63	1.75	1.88	2.13

TEMPERATURE CORRECTION FACTORS (5)						
Inlet temp (°C)	25	30	35	40	45	50
Correction factor	1.00	0.98	0.95	0.9	0.8	0.7

DEW POINT CORRECTION FACTORS (5)		
Inlet temp (°C)	-40	-70
Correction factor	1.00	0.70

(1) NDL 010 to NDL 050 have push to connect fittings on the inlet and outlet. All other models have BSPP threaded connections.
(2) At inlet conditions of 7 barg and 25°C and a -40°C outlet pressure dew point. For all other conditions refer to the correction factors above.
(3) 1 micron after filter changed every 2 years with desiccant column. For annual filter change with M1/M01 filters fit separate RM1 after filter.
(4) Per ISO 8573:1:2010 (E)
(5) With separate M01 grade filter
(6) Maximum operating pressure as follows: models NDL 010 to 050 are 16 barg(MAWP); models NDL 060 to 130 are 16 barg (MAWP) as standard; models NDL 2110 to 6130 are 10 barg (MAWP) as standard (optional 16 barg).
(7) To be used as a rough guide only. All applications should be confirmed by nano. Contact sales_uk@nano-purification.com.
(8) Technical specifications subject to change without notice. Direct inquiries to sales_uk@nano-purification.com.

D^1 & D^2 - NDL 010 to NDL 130

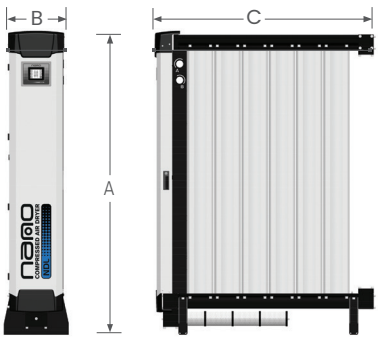

D^3 - NDL 2110 to NDL 6130

Experience.
Customer.
Service.

nano

nano-purification solutions
www.nano-purification.com

Headquarters

United States
Charlotte, North Carolina
Phone: +1 704 897 2182
E-mail: support@airandgassolutions.com

United States
Maryville, Tennessee
Phone: +1 704 897 2182
E-mail: support@airandgassolutions.com

Canada
St. Catharines, Ontario
Phone: +1 905 684 6266
E-mail: canadasupport@airandgassolutions.com

Singapore
Singapore
Phone: +65 6748 7988
E-mail: support.asia@nano-purification.com

United Kingdom
Gateshead, Tyne and Wear
Phone: +44 (0) 191 497 7700
E-mail: sales_uk@nano-purification.com

Germany
Erkelenz, Germany
Phone: +49 2431 9550 600
E-mail: sales_de@nano-purification.com

Publication Reference: D123-UK-EN-Version-001 | ©2025 Air & Gas Solutions LLC