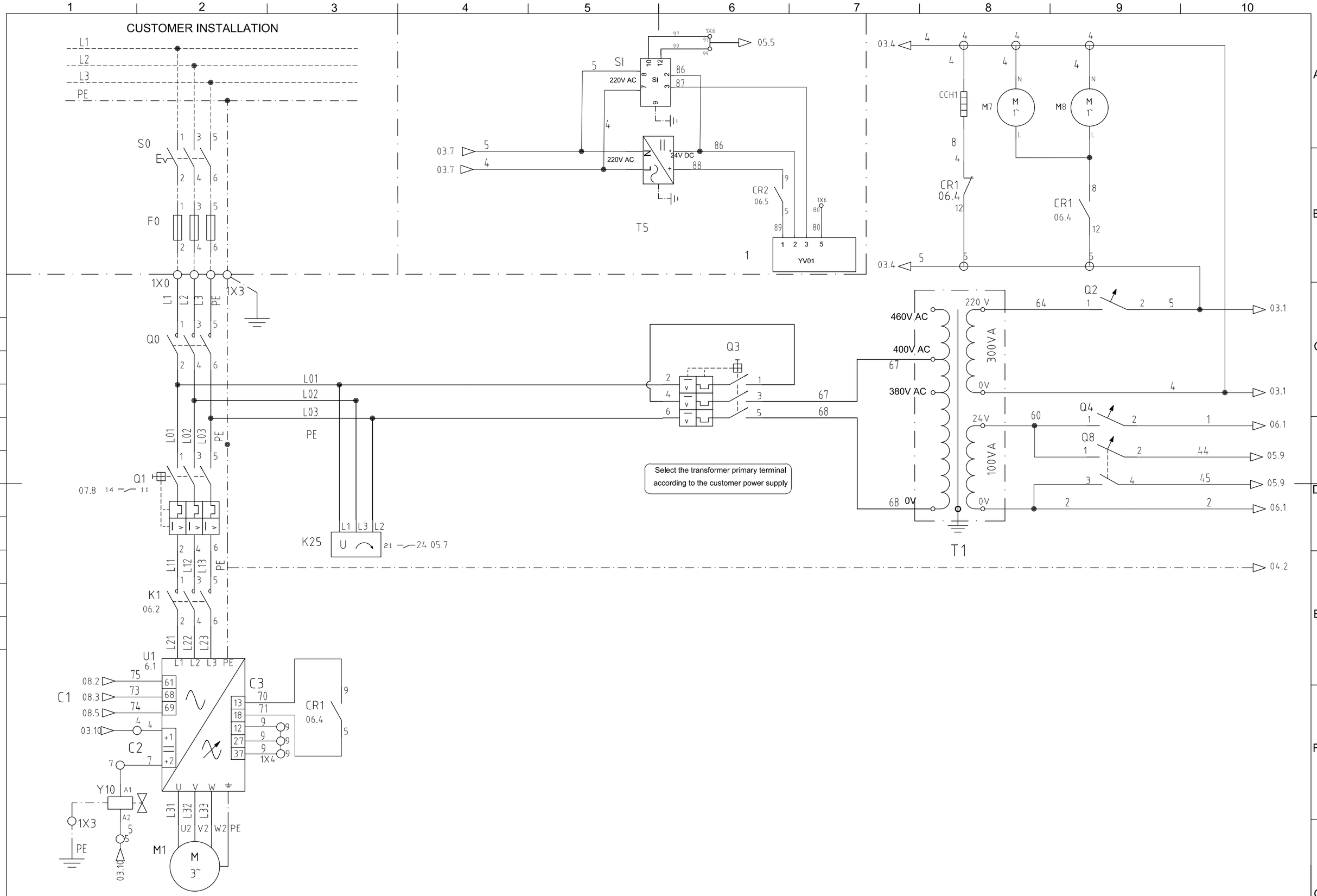

ACDE	Name	Service diagram	DXR600~1260VSD W-A	STATUS	Ed.	Date	Prev. Page 02	Next Page 04	A3
Drawing owner COX				Approved Internal	03	2023/9/13	Drawn by	Date	

Designation 9843041563 Sheet 03 (09)