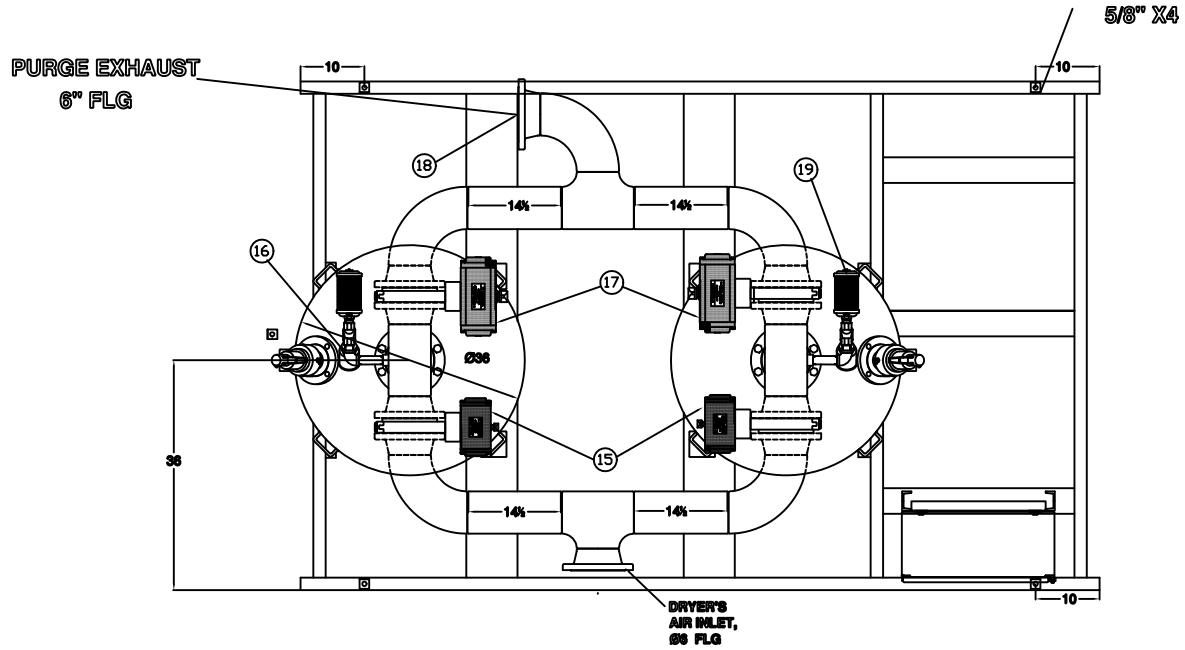

TOP VIEW OF UPPER PIPING

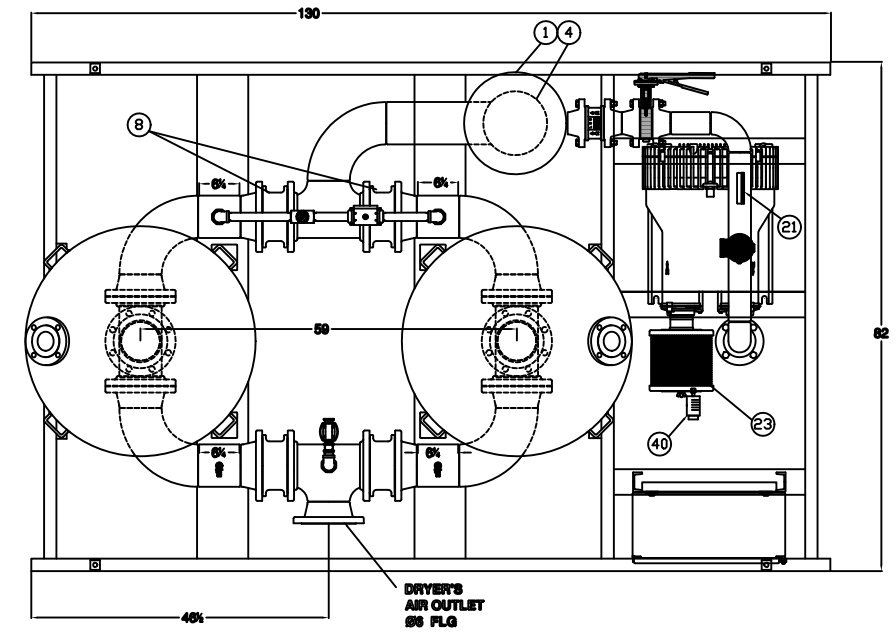

TOP VIEW OF LOWER PIPING

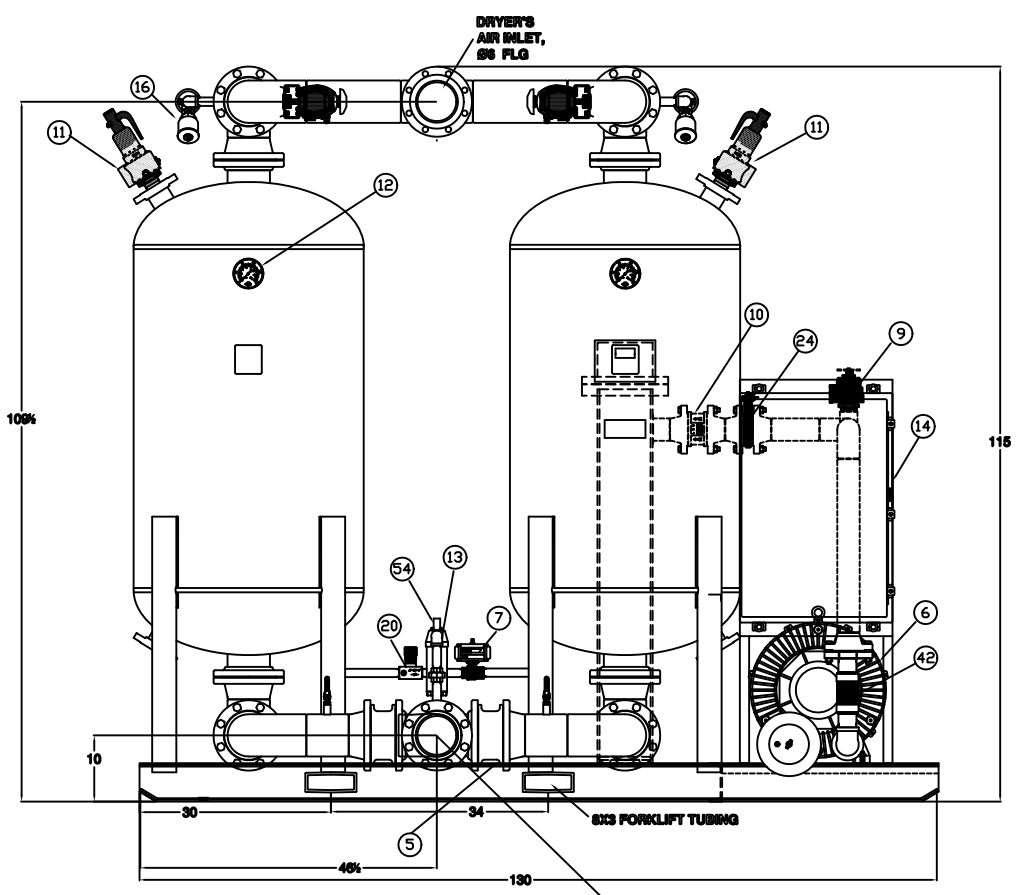

FRONT VIEW

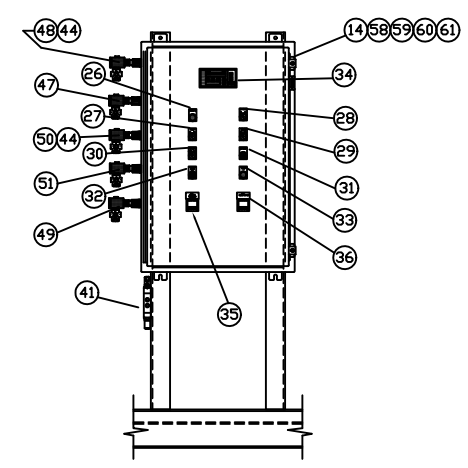

ELECTRICAL ENCLOSURE

ITEM	QTY	DESCRIPTION
1	1	HEATER HOUSING (STEAM HEAT EXCHANGER)
2	1	'K' TYPE THERMOCOUPLE FOR HEATER TEMPERATURE CONTROL/ PURGE AIR TEMP.
3	2	DESICCANT TOWER
4	1	HEATER: 60 KW (OR STEAM)
5	2	WAFER STYLE OUTLET CHECK VALVE
6	1	BLOWER" 20 HP
7	1	REPRESSURIZATION VALVE
8	2	PURGE CHECK VALVE
9	1	BLOWER PRESSURE RELIEF VALVE
10	1	BLOWER SAFETY CHECK VALVE
11	2	TOWER PRESSURE RELIEF VALVE
12	2	TOWER PRESSURE GAUGE
13	1	CONTROL AIR FILTER
14	1	ELECTRICAL ENCLOSURE
15	2	INLET VALVE
16	2	DEPRESSURIZATION VALVE
17	2	PURGE EXHAUST VALVE
18	1	PURGE EXHAUST
19	2	DEPRESSURIZATION MUFFLER
20	1	PURGE ADJUATMENT VALVE
21	1	PRESSURE GAUGE, FOR BLOWER BACK PRESSURE
22	1	BLOWER SAFETY PRESSURE SWITCH (inside enclosure)
23	1	BLOWER INTAKE FILTER SILENCER
24	1	BLOWER ISOLATION VALVE
25	1	N/A
26	1	POWER ON
27	1	POWER OFF/ON SWITCH
28	1	DEMAND CYCLE OFF/ON SWITCH(OPTION)
29	1	DRY AIR COOLING OFF/ON SWITCH
30	1	MANUAL/AUTOMATIC SWITCH
31	1	STEP CYCLE PUSHBUTTON (FOR TROUBLESHOOTING ONLY)
32	1	ALARM RESET PUSHBUTTON
33	1	COMMON ALARM LIGHT , RED
34	1	TEXT DISPLAY
35	1	HEATER TEMP./PURGE TEMP. CONTROLLER
36	1	HEATER HI LIMIT/MID RANGE CUTOUT TEMP. CONTROLLER
37		(NOT USED)
38		(NOT USED)
39		(NOT USED)
40	1	BLOWER FILTER ELEMENT CHANGE INDICATOR
41	1	TOWER SELECTOR VALVE
42	1	BLOWER FLEX CONNECTOR
43	1	REPRESSURIZATION BALL VALVE
44	2	PURGE EXHAUST (OPEN SLOW) CONTROL VALVE
45	1	HEATER HIGH LIMIT THERMOCOUPLE LOCATED INSIDE HEATER IN THERMOWELL
46	1	N/A
47	1	LEFT TOWER DEPRESSURIZATION PILOT SOLENOID VALVE, 3-WAY
48	1	LEFT TOWER PURGE EXHAUST PILOT SOLENOID VALVE, 3-WAY
49	1	REPRESSURIZATION PILOT SOLENOID VALVE, 3-WAY
50	1	RIGHT TOWER PURGE EXHAUST PILOT SOLENOID VALVE, 3-WAY
51	1	RIGHT TOWER DEPRESSURIZATION PILOT SOLENOID VALVE, 3-WAY
52	1	N/A
53	1	CONTROL AIR LINE
54	1	CONTROL AIR FILTER DP INDICATOR
55	1	N/A
56	1	N/A
57	1	N/A
58	1	LEFT TOWER LOW PRESSURE SWITCH
59	1	LEFT TOWER HIGH PRESSURE SWITCH
60	1	RIGHT TOWER LOW PRESSURE SWITCH
61	1	RIGHT TOWER HIGH PRESSURE SWITCH

SPECIFICATIONS:

DESICCANT PER TOWER: 2000LBS
DESICCANT TYPE: 3/16" DIA. ACTIVATED ALUMINA
DESIGN INLET TEMPERATURE: 100 DEG.F
DESIGN WORKING PRESSURE: 100PSIG
MAXIMUM ALLOWABLE WORKING PRESSURE: 150PSIG
MAXIMUM TOWER DESIGN TEMPERATURE: 450 DEG.F
DRYING AIRFLOW: DOWNDRAFT
REGENERATING AIR FLOW: UPDRAFT

NOTES:

1 ALL DIMENSIONS ARE IN INCHES UNLESS OTHERWISE NOTED.
2 MARK/TAG COMPONENT WITH SULLIAR PART NUMBER AND REVISION.
3 PAINT PER SULLIAR SPEC. 02250055-350
4 PIPING CONNECTIONS TO AND FROM FILTERS BY CUSTOMER DIMENSIONS PROVIDED FOR REFERENCE ONLY

TOLERANCES U.O.S	
DIMENSIONS ARE IN INCHES	
ALL DIMENSIONS:	± 1/16"
ANGULAR DIMENSION	±1.0°
HOLE DIAMETER	±0.03

FINISH: ☐ 125" UNLESS NOTED ☐ AS CAST UNLESS NOTED

MATERIAL SPEC | SHEET THICKNESS | PLATE SPEC | SHAFT SPEC | HARDNESS | FINISH SPEC

DATA CONTAINED IN THIS DRAWING IS THE PROPERTY OF SULLIAR CORPORATION. IT IS TRANSMITTED TO THE RECIPIENT FOR THE PURPOSE OF ASSISTING THE RECIPIENT IN THE MANUFACTURE, USE, OR SALE OF EQUIPMENT OR PARTS OF SULLIAR CORPORATION. THIS DATA MAY NOT BE REPRODUCED OR DISCLOSED TO OTHERS WITHOUT THE WRITTEN PERMISSION OF SULLIAR CORPORATION.

FIRST USE	DRAWN BY	DATE
X01Q	MZ	8-7-12

THIRD ANGLE PROJECTION DO NOT SCALE DRAWING

NAND

ID, DRYER BLOWER PURGE NBP-3500

SIZE	CAGE CODE	DWG NO	REV
C	31654	NBP-3500M1	00

SCALE NONE WEIGHT 10500LBS SHEET 1 OF 1