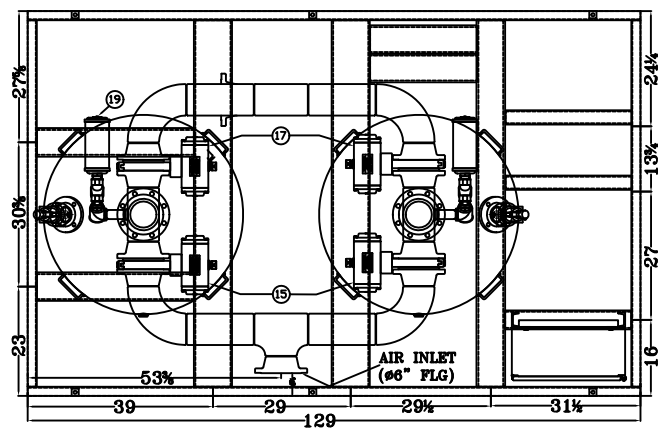

TOP VIEW OF UPPER PIPING

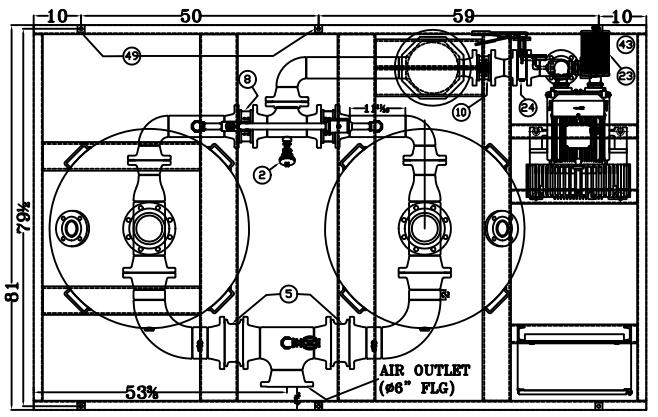

TOP VIEW OF LOWER PIPING

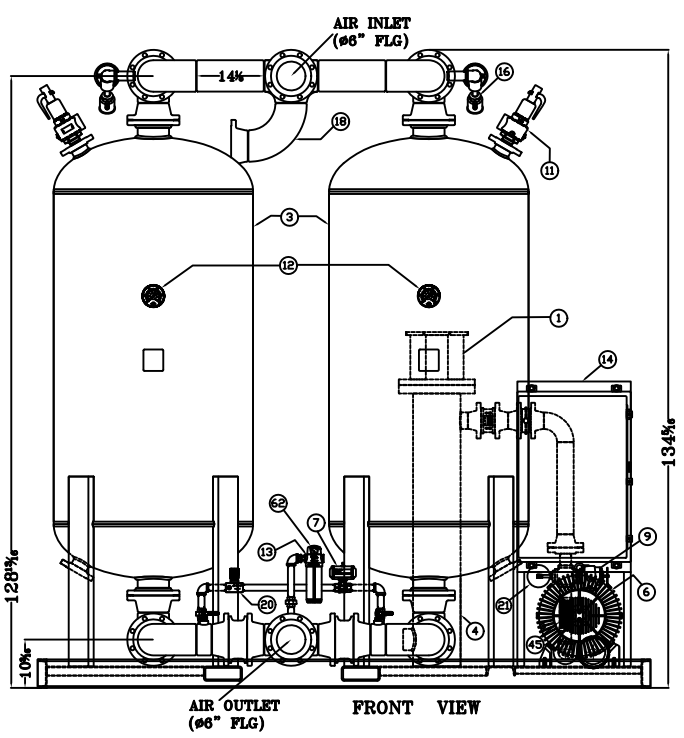

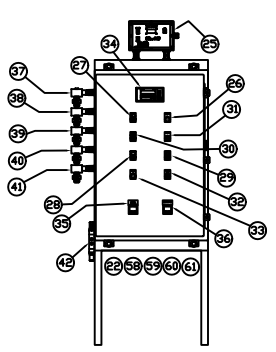

ELECTRICAL ENCLOSURE (DETAIL VIEW)

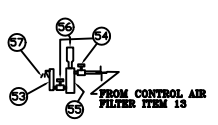

HUMIDITY SENSOR AND HOLDER LOCATED NEAR ELECTRICAL ENCL.

SPECIFICATIONS:

DESICCANT PER TOWER: 2500LBS
DESICCANT TYPE: ø3/16" ACTIVATED ALUMINA
APPROXIMATE WEIGHT OF UNIT INCLUDING DESICCANT: 10000 lb
MAXIMUM ALLOWABLE WORKING PRESSURE: 150 PSIG
MAXIMUM TOWER DESIGN TEMPERATURE: 450 °F
DESIGN INLET TEMPERATURE: 100 °F
DESIGN WORKING PRESSURE: 100 PSIG
DRYING AIRFLOW: DOWNDRAFT
REGENERATING AIR FLOW: UPDRAFT

REVISIONS

ZONE	REV	ECO No	DESCRIPTION	DATE	REV BY
	00	XXXXX	RELEASED		XXX

ITEM	QTY	DESCRIPTION
1	1	HEATER HOUSING
2	1	'K' TYPE THERMOCOUPLE FOR HEATER TEMPERATURE CONTROL/ PURGE AIR TEMP.
3	2	DESICCANT TOWER (ø42)
4	1	HEATER 75 KW
5	2	WAFER STYLE OUTLET CHECK VALVE (6" FLG)
6	1	BLOWER (20 HP 460VAC-3PH-60HZ)
7	1	REPRESSURIZATION BALL VALVE (1" NPT)
8	2	PURGE CHECK VALVE (4" FLG)
9	1	BLOWER PRESSURE RELIEF VALVE (2" NPT)
10	1	BLOWER SAFETY CHECK VALVE (3" FLG)
11	2	TOWER PRESSURE RELIEF VALVE (2" NPT)
12	2	TOWER PRESSURE GAUGE (0-200 PSIG)
13	1	CONTROL AIR FILTER (1/2" NPT)
14	1	ELECTRICAL ENCLOSURE (10x24x36)
15	2	INLET VALVE (6" FLG)
16	2	DEPRESSURIZATION VALVE (1/5" NPT)
17	2	PURGE EXHAUST VALVE (6" FLG)
18	1	PURGE EXHAUST
19	2	DEPRESSURIZATION MUFFLER (1.5" NPT)
20	1	HEATLESS MODE ADJUSTMENT VALVE (1" PT)
21	1	BLOWER BACK PRESSURE GAUGE (0-15 PSIG)
22	1	BLOWER SAFETY PRESSURE SWITCH (NOT SHOWN)
23	1	BLOWER INTAKE FILTER SILENCER (3" NPT)
24	1	BLOWER ISOLATION VALVE (3" FLG)
25	1	DEWPOINT MONITOR (OPTIONAL)
26	1	POWER ON LIGHT
27	1	POWER OFF/ON SWITCH
28	1	DEMAND CYCLE OFF/ON SWITCH
29	1	DRY AIR COOLING OFF/ON SWITCH
30	1	MANUAL/AUTOMATIC SWITCH
31	1	STEP CYCLE PUSHBUTTON (FOR TROUBLESHOOTING ONLY)
32	1	ALARM RESET PUSHBUTTON
33	1	COMMON ALARM LIGHT (RED)
34	1	TEXT DISPLAY
35	1	HEATER TEMP./PURGE TEMP. CONTROLLER
36	1	HEATER HI LIMIT/MID RANGE CUTOUT TEMP. CONTROLLER
37	1	LEFT TOWER PURGE EXHAUST PILOT SOLENOID VALVE, 3-WAY
38	1	RIGHT TOWER PURGE EXHAUST PILOT SOLENOID VALVE, 3-WAY
39	1	LEFT TOWER DEPRESSURIZATION PILOT SOLENOID VALVE, 3-WAY
40	1	RIGHT TOWER DEPRESSURIZATION PILOT SOLENOID VALVE, 3-WAY
41	1	REPRESSURIZATION PILOT SOLENOID VALVE, 3-WAY
42	1	TOWER SELECTOR VALVE
43	1	BLOWER FILTER ELEMMENT CHANGE INDICATOR
44	1	HEATER HIGH LIMIT THERMOCOUPLE 'K' TYPE, (LOCATED INSIDE HEATER; NOT SHOWN)
45	1	BLOWER FLEX CONNECTOR
46		NOT USED
47		NOT USED
48		NOT USED
49	6	MOUNTING HOLE (ø11/16")
50-52		NOT USED
53	1	FLOW METER
54	2	DEWPOINT SENSOR ISOLATION VALVES
55	1	DEWPOINT SENSOR SAMPLE CELL
56	1	DEWPOINT SENSOR
57	1	DEWPOINT SENSOR EXHAUST
58	1	LEFT TOWER LOW PRESSURE SWITCH (NOT SHOWN)
59	1	LEFT TOWER HIGH PRESSURE SWITCH (NOT SHOWN)
60	1	RIGHT TOWER LOW PRESSURE SWITCH (NOT SHOWN)
61	1	RIGHT TOWER HIGH PRESSURE SWITCH (NOT SHOWN)
62	3	PRESSURE DIFFERENTIAL INDICATOR

TOLERANCES U.O.S	
DIMENSIONS ARE IN INCHES	
ALL DIMENSIONS:	±1/16
ANGULAR DIMENSION:	±1.0°
HOLE DIAMETER:	±0.03

FINISH:
☐ 125 UNLESS NOTED
☐ AS CAST UNLESS NOTED

MATERIAL SPEC	
HEAT TREAT	
TORQUE SPEC	
MANU SPEC	
HARDNESS	
FINISH SPEC	SEE NOTE

THIS DOCUMENT IS THE PROPERTY OF NANO-PSI CORPORATION AND SHALL NOT BE REPRODUCED IN WHOLE OR IN PART WITHOUT WRITTEN PERMISSION. IT MUST BE RETURNED TO US UPON REQUEST. NANO-PSI CORPORATION DOES NOT ASSUME ANY LIABILITY FOR ANY DAMAGES WHATSOEVER ARISING OUT OF THE USE OF THIS DOCUMENT OR THE INFORMATION CONTAINED THEREIN. THIS DOCUMENT MUST BE RETURNED UPON REQUEST. THIS DOCUMENT CONTAINS PROPRIETARY INFORMATION. IT MUST NOT BE DISCLOSED TO THIRD PARTIES WITHOUT WRITTEN PERMISSION. IT MUST BE RETURNED UPON REQUEST OR WHEN THE RFQ, PROPOSAL AND/OR BID HAVE BEEN WITHDRAWN OR CONTRACT AWARDED.

PROD CODE	DRAWN BY	DATE
X01Q	SA	11-04-13

THIRD ANGLE PROJECTION
DO NOT SCALE DRAWING

NANO-PSI CORPORATION

ID, DRYER BLOWER PURGE
NBP-4000 W/O FLTR

SIZE	CAGE CODE	DWG No	REV
C	31654	NBP-4000-M1	00

SCALE NONE WEIGHT 10000 lb SHEET 1 of 1