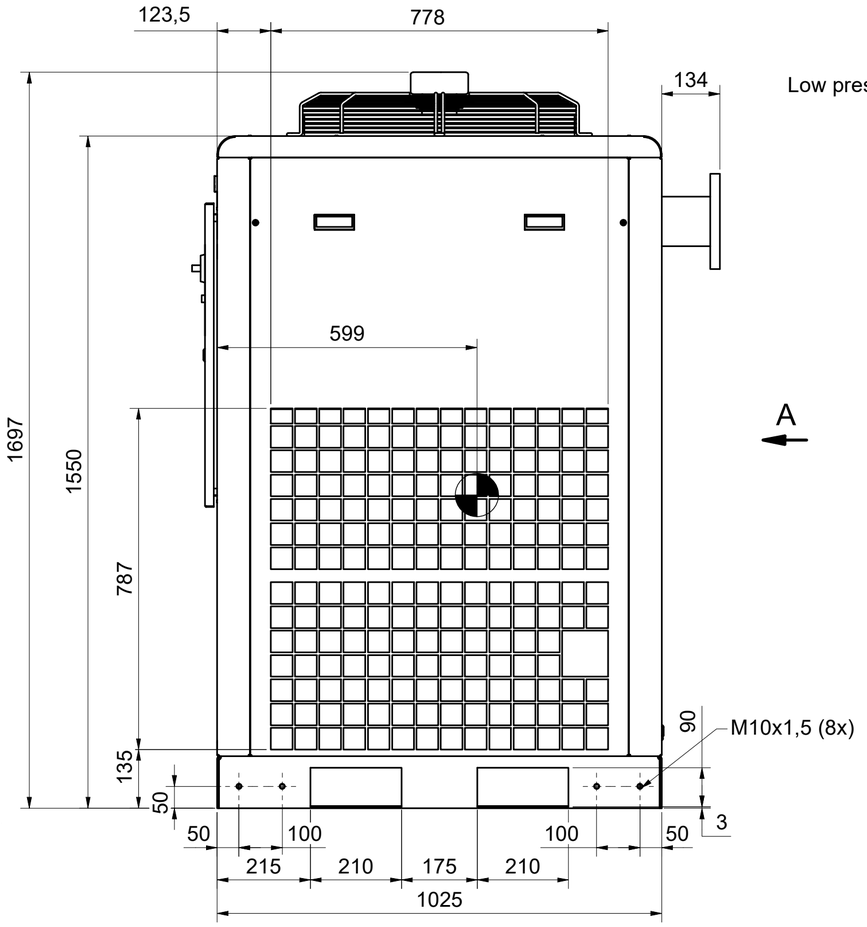

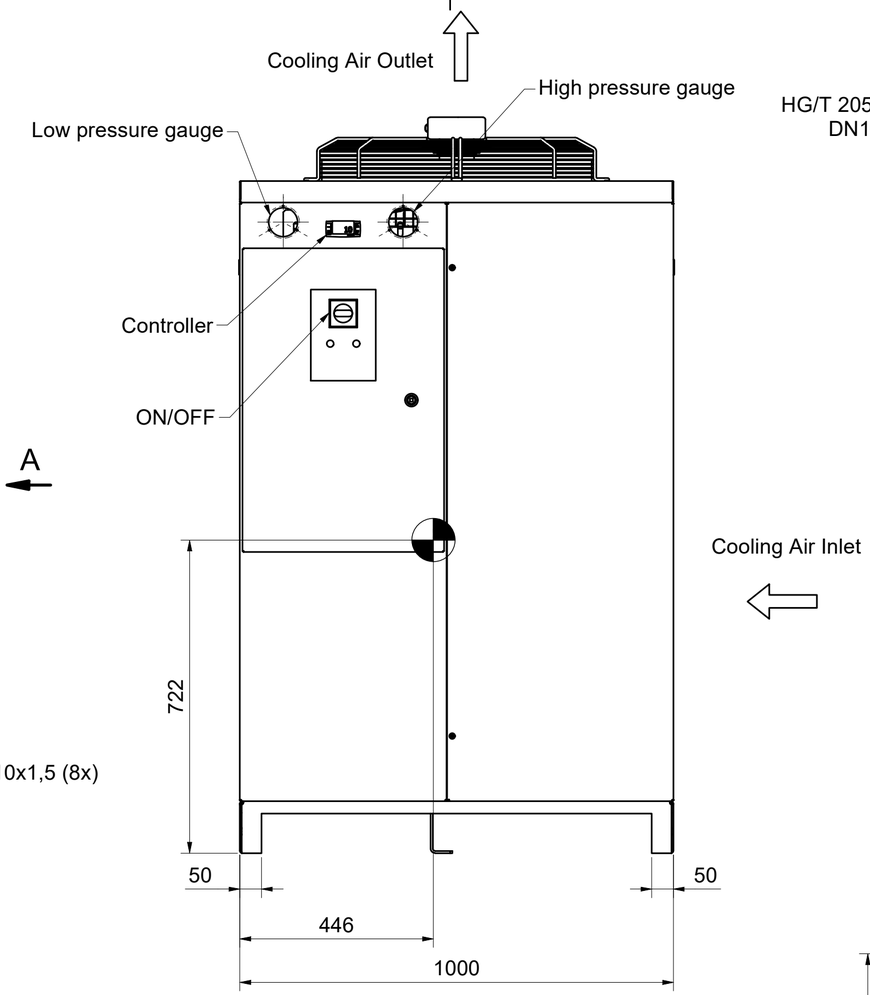

A (1 : 10)

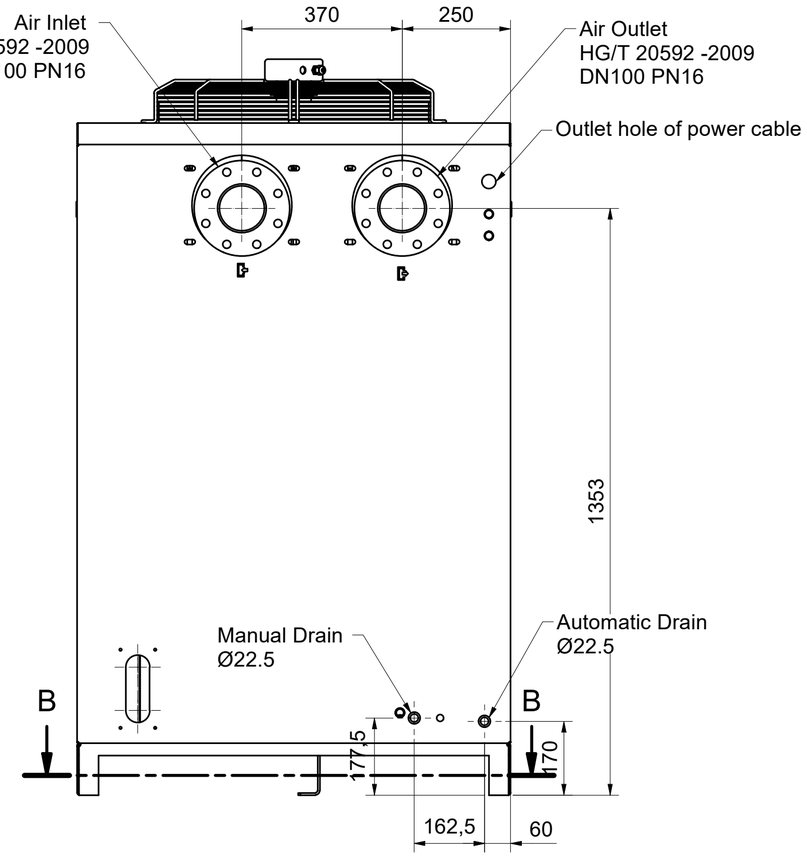

B-B (1 : 10)

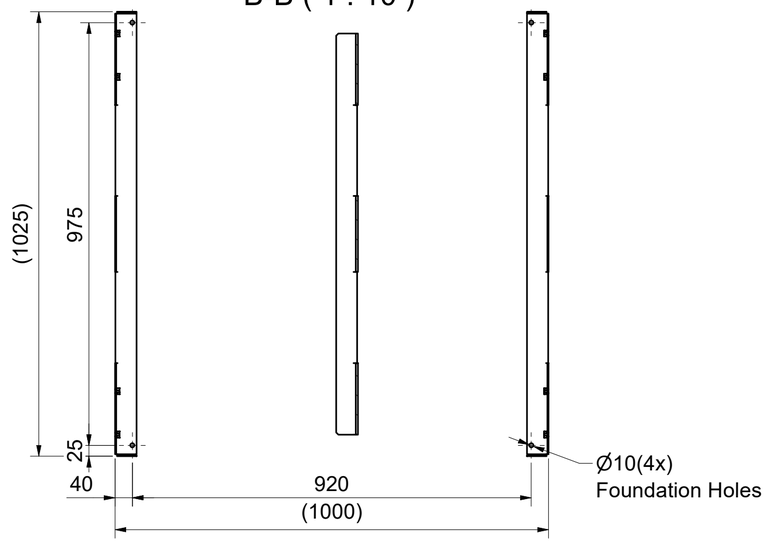

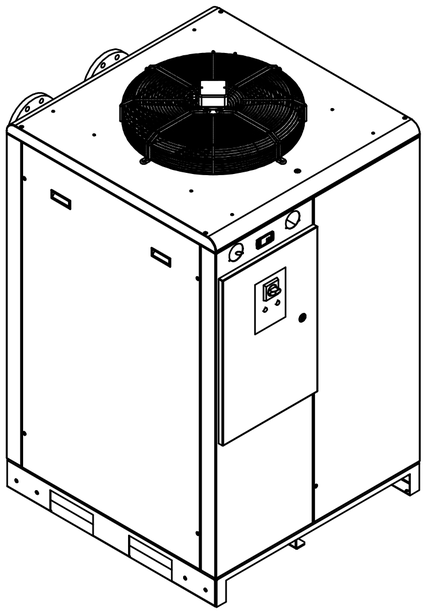

Center of Gravity

00				
Ed	Position	Modified from	Date	Intr./Appd.

9843040875	
Parent 3D model	Ed . Version 3D

Tolerances, if not indicated, according to:

Name	Dimension Drawing	DXR360~450~510-A	
Material	Not Applicable		
Treatment	Not Applicable		INV
Scale	1 : 10	Family	Compare
Drawn by	coxwx	Blank nr.	Replaces
Drawing format	A2	Blank wt Kg	Fini wt. N/A
Des checked.		Prod checked.	Approved.
Date	1/8/2018		
STATUS	Approved Internal		
Drawing Owner	COX	Transferred from	
Designation	9843040875	Sheet	1 / 1