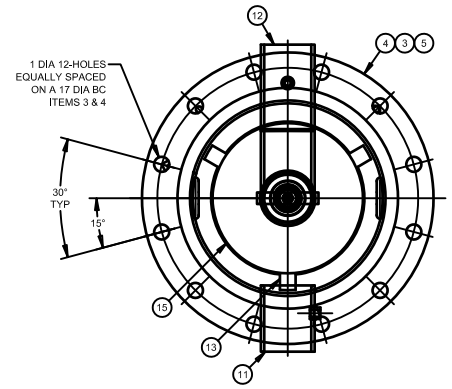

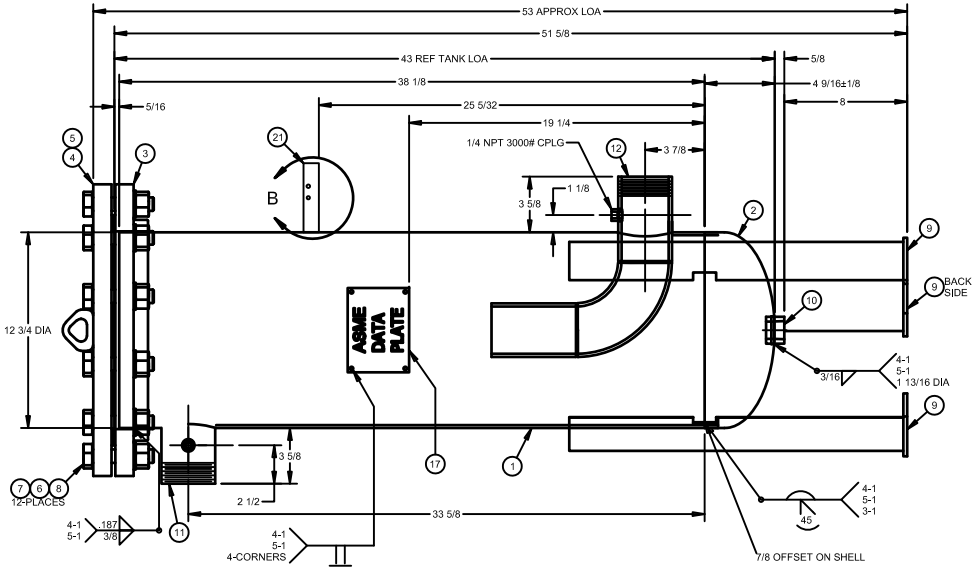

INSPECTION NOTE:
JOGGLE STAKE WELD PORTION
OF SHELL MUST BE DYE
PENETRANT INSPECTED

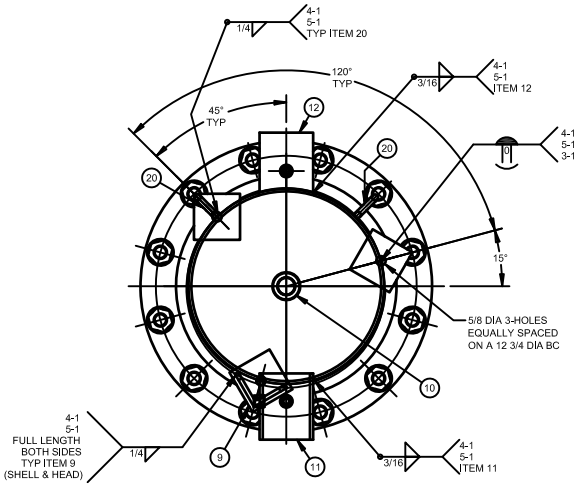

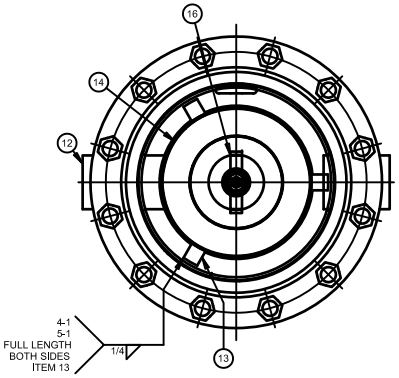

COVER REMOVED FOR CLARITY

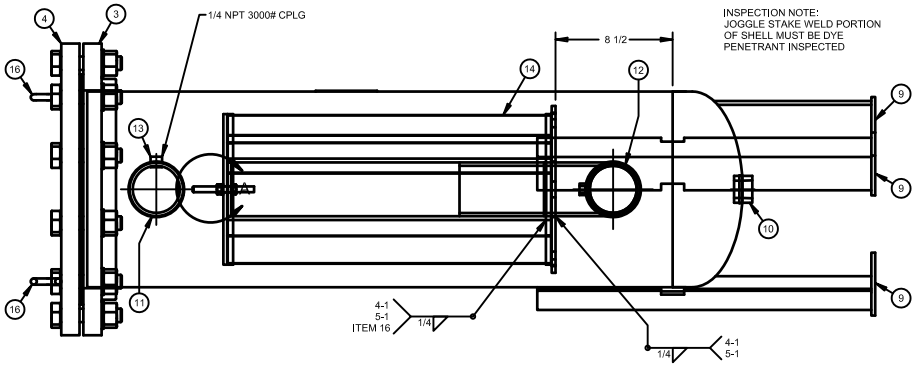

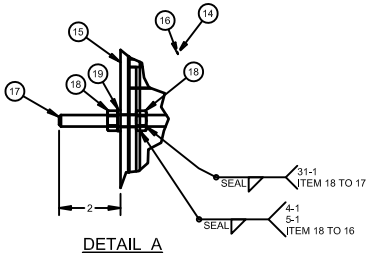

DETAIL A

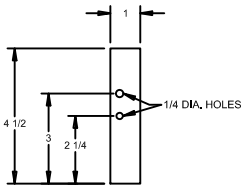

DETAIL B

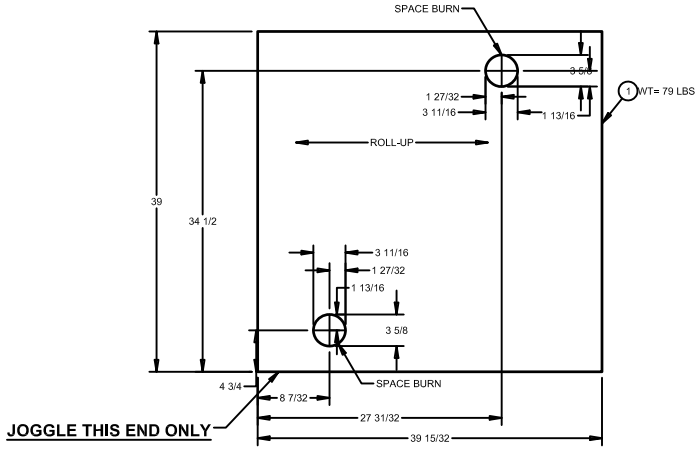

JOGGLE THIS END ONLY

ITEM	QTY	DESCRIPTION
21	1	DPG GAUGE PLATE
20	1	WASHER FLAT 3/8 ZINC PLTD
19	2	NUT 3/8-16 UNC HEX ZINC PLTD
18	1	STUD 3/8-16 UNC X 4 LG SA193 B8 T304
17	1	DATA PLATE ASME CARBON STEEL
16	2	LIFTING LUG PHOENIX 2-898-MINI
15	1	TOP PLATE
14	1	FILTER ELEMENT - E0500
13	2	CPLG 0.250 NPT SA105 3000# HALF
12	1	PIPE 3.000,CPLG & ELBOW ASSY S40 0.216W
11	1	PIPE 3.000 & CPLG ASSY S40 0.216W X 4.19
10	1	CPLG 1.000 NPT SA105 3000# HALF
9	3	LEG ASSY
8	12	BOLT 7/8-9 UNC HEX X 4 ZINC PLTD
7	12	WASHER FLAT 7/8 ZINC
6	12	NUT 7/8-9 UNC HEX ZINC
5	1	GASKET RING 12 150# VITON
4	1	COVER ASSY
3	1	FLG 12 150# RFSO SA105
2	1	HEAD - ELL 12.75 DIA (911-003)
1	1	SHELL 0.187 X 39.00 X 39.47

1. SHELL **.187** NOM **SA414 GR G** P.V.Q.
   DES. THK. **.094** E= **70%**
   HEADS **.176** MIN **SA414 GR G** P.V.Q.
   DES. THK. **.094** S= **85%**
2. WORKING PRESSURE **150** PSI
3. TEST PRESSURE **HYDRO 195** PSI
4. TEMPERATURE MIN. **0**°F MAX **200**°F
5. ALL WELDED FITTINGS MUST BE HELD PERPENDICULAR TO CENTERLINE WITHIN 3/8" IN 12"
6. IMPACT TEST EXEMPT PER PAR.UG-20(F)
7. SPECIFICATIONS:
   CALCULATED WEIGHT: **347** LB
   CALCULATED CAPACITY: **20** GALLONS
8. CRN- **NONE**
9. N.D.T.- **PT**
10. FINISH- SEE **139-980** FINISH SPEC

(BUILT IN ACCORDANCE WITH LATEST EDITION OF SECTION VIII DIV 1 ASME CODE)

THIS DRAWING & SPECIFICATIONS ARE PROPERTY OF SILVAN IND. AND MAY NOT BE COPIED, REPRODUCED, OR USED IN WHOLE OR PART, AS A BASIS FOR DESIGN MANUFACTURE OR SALE WITHOUT PRIOR PERMISSION FROM SILVAN IND.

REV	DESCRIPTION	BY	DATE
D	REMOVED MATERIAL FROM FILTER HOUSING	NES	8/24/22
C	CORRECTED WEIGHT AND SEPARATOR ELEMENT PART NUMBER	KAT	7/6/17
B	ITEM 17 WAS A BOLT. CHANGED TO THREADED STUD	KAT	5/5/17
A	ISSUED		

UNLESS OTHERWISE SPECIFIED INCH TOLERANCES
.X.....±.1
.XX.....±.02
.XXX.....±.005
FRACTIONS.....±1/16
ANGLE.....±1°
FINISH.....250
THIRD ANGLE PROJ

TITLE
50-12.75-20-150 ASME VESSEL

MODEL: MEL 0500

CUST DWG NO: NONE
TYPE: ASME

nano PURIFICATION SOLUTIONS

DRAWN	CHECKED	DRAWING NO.	REV
AGI 5/3/2017	MF 6/20/2017	139-980	D

SIZE: C
SHEET 1 OF 1