All materials supplied are in compliance with the requirements of the List of Prohibited Substances

NED 8LC						
ProductNr	ItemNr	Model	Power Supply	Inlet A	Inlet B	Inlet C
8102 0482 21	4001 1652 21	NED 8LC B12 230V	240V AC	G 1/2" F	G 3/4" M	G 1/2" F
8102 0482 22	4001 1652 22	NED 8LC N12 115V	115V AC	NPT R1/2" F	-	NPT R1/2" F
8102 0482 23	4001 1652 23	NED 8LC B12 24Vac	24V AC	G 1/2" F	G 3/4" M	G 1/2" F
8102 0482 24	4001 1652 24	NED 8LC B12 24Vdc	24V DC	G 1/2" F	G 3/4" M	G 1/2" F

2

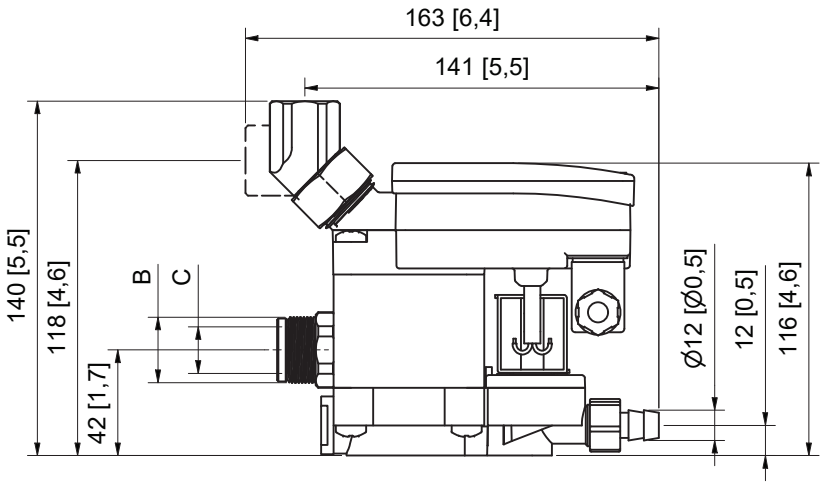

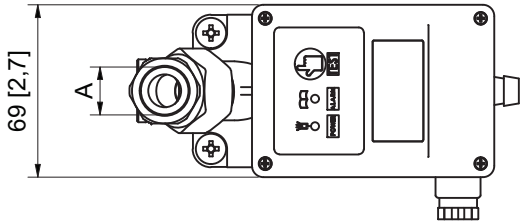

PRESSURE EQUIPMENT PART Designed, built, tested, certified and marked according to	
European Directive PED 2014/68/EU and its amendments	Art. 4.3
UK Pressure Equipment (Safety) Regulation 2016 S.I. 2016/1105	Regulation 8
Medium	AIR/WATER
Design pressure	16 bar
Min. design temperature	+1 °C
Max. design temperature	+60 °C
Nominal diameter (DN)	15
Volume	0,09 L
Test pressure	24 bar
Testing according to SQA-plan : Sample test:	X
100% test:	

Tolerances, if not indicated, according to:					
STANDARD CLASS					
Name	DRAIN ELECTRONIC			NED 8LC	Confidentiality Class acc. to 1102 K
Material	Not Applicable				Confidential
Treatment	Untreated				INV
nano	Scale 1 : 2	Family	A3	Compare	Drawing owner
	Drawn by AIR15392	Blank nr.		Replaces	API
STATUS	Version Drwg	Blank wt Kg	Fini wt. 0,600 kg	Designation	Sheet 1 / 1
Released	Des checked.	Prod checked.	Approved.	Date 7/06/2022	4001165220-01

Ed	Position	Modified from	Date	Intr./Appd.	Parent 3D model	Ed . Version 3D
2		Drain naming changed from 30L to 8L	23/08/2022	User Agent	4001165420-M1	

CONFIDENTIAL:
This document is our property and shall not without our permission be altered, copied, used for manufacturing or communicated to any other person or company.