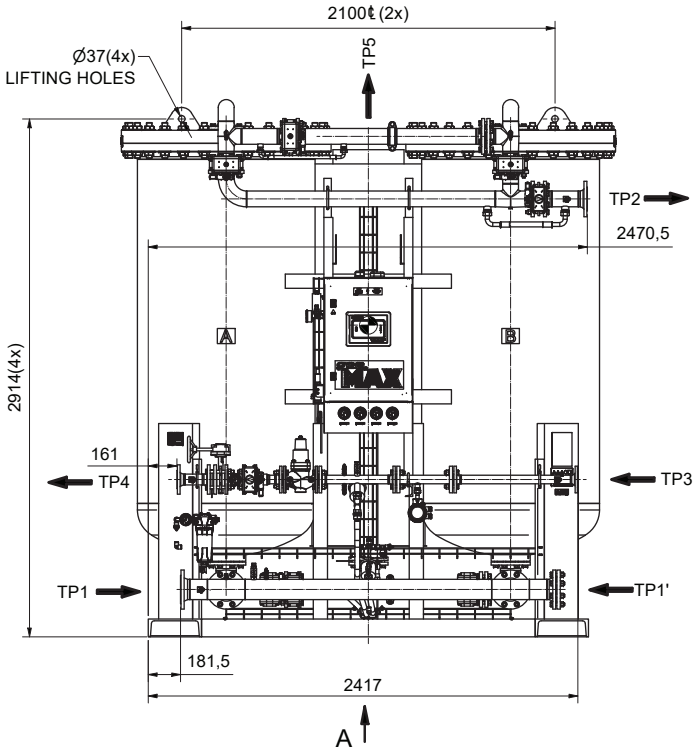

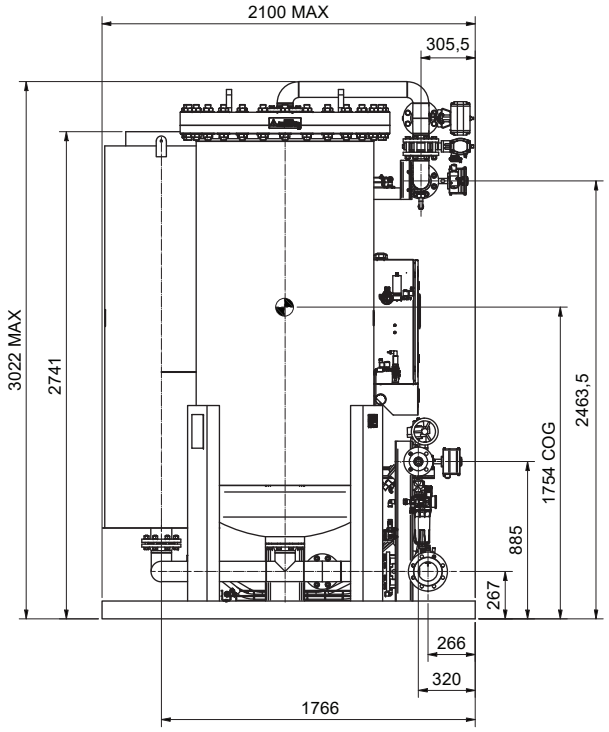

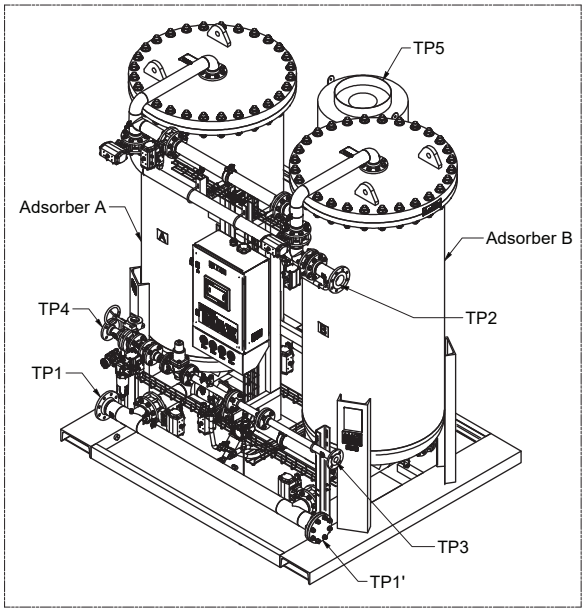

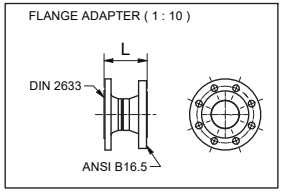

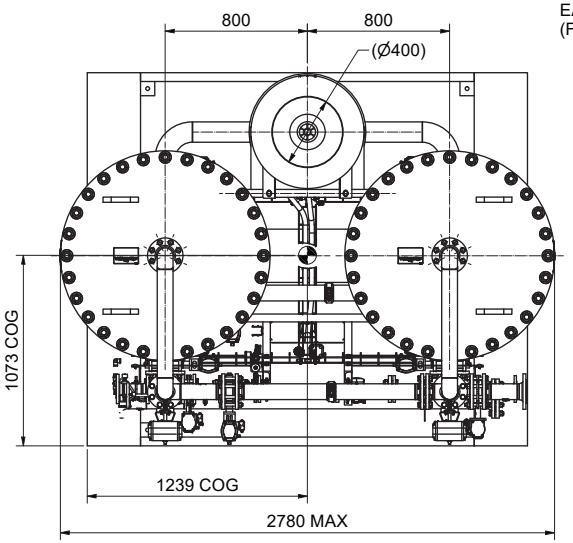

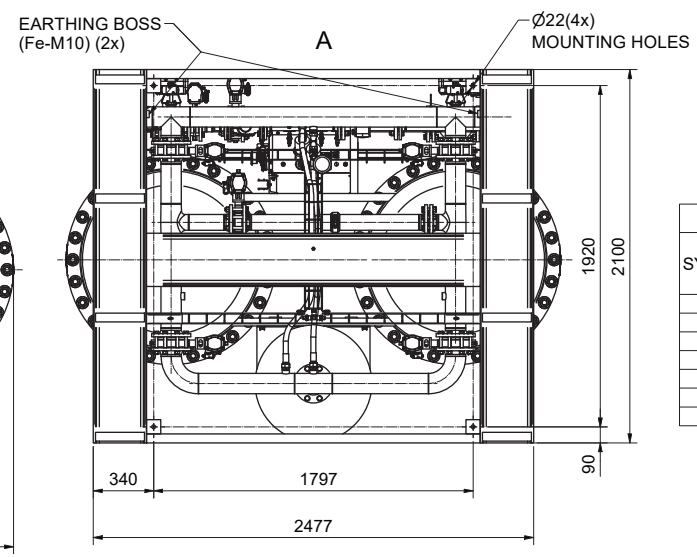

Note:
ASME units will be delivered with the DIN to ANSI adapters (shipped as loose items), to be installed on TP1 to TP4

Center of Gravity (±100mm)

Weight: 6376 kg (±50 kg)

TIE- IN POINTS						
SYMBOL	DESCRIPTION	DIN 2633		ANSI B16.5		DIN to ANSI Adapter Length (L) (mm)
		SIZE	RATING	SIZE	RATING	
TP1	AIR INLET	DN100	PN16	4"	150Lbs	130
TP1'	AIR INLET REVERSED	DN100	PN16	4"	150Lbs	130
TP2	TO PRODUCT TANK	DN80	PN16	3"	150Lbs	121
TP3	FROM PRODUCT TANK	DN40	PN16	1 1/2"	150Lbs	105
TP4	GAS OUTLET	DN50	PN16	2"	150Lbs	110
TP5	WASTE EXHAUST GAS	Ø400mm		Ø400mm		NA

Tolerances, if not indicated, according to:
STANDARD CLASS

Name	DIMENS. DRWG	GEN2-MAX 20K PPM	Confidentiality Class acc. to 1102 K Internal
Material	Not applicable		
Treatment	Not Applicable		INV

Scale 1 : 20	Family	A2	Compare		Drawing owner NLY
Drawn by INEBM	Blank nr.		Replaces		
Version Drwg	Blank wt Kg	Fini wt.	Designation		Sheet 1 / 1
Des checked.	Prod checked.	Approved.	Date 18/01/2022		1607011167-01

STATUS Released

Ed	Position	Modified from	Date	Intr./Appd.
1			21/04/2022	User Agent

1607011167-M1	
Parent 3D model	Ed . Version 3D

All materials supplied are in compliance with the requirements of the List of Prohibited Substances

CONFIDENTIAL:
This document is our property and shall not without our permission be altered, copied, used for manufacturing or communicated to any other person or company.