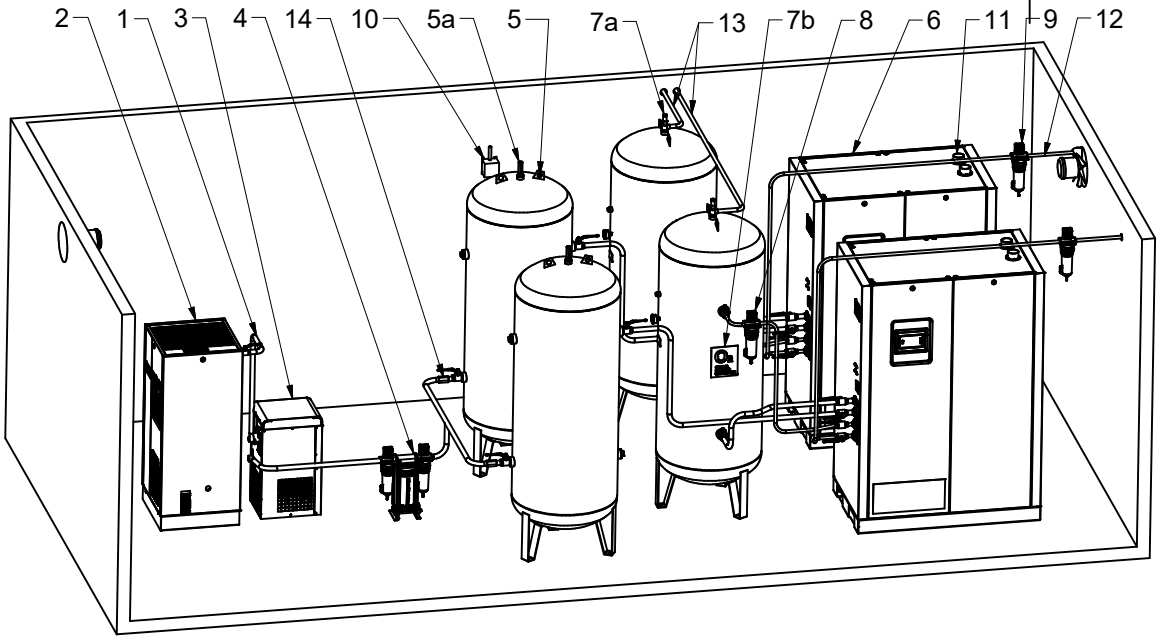

Legend	
1	Piping
2	Compressor
3	Dryer
4	Filtration
5	Air tank
5a	Safety valve
6	Oxygen generator
7	Product tank
7a	Oxygen safety valve
7b	Oxygen tank label
8	Oxygen filter
9	Oxygen filter anti-bacterial (optional)
10	Room oxygen sensor (optional)
11	Waste exhaust
12	Oxygen outlet to customer or storage tank
13	Oxygen safety valve exhaust pipe
14	Check valve

Pipe Connections

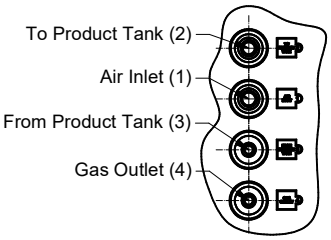

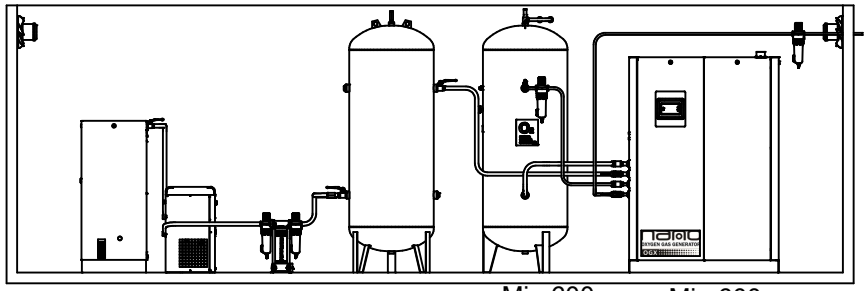

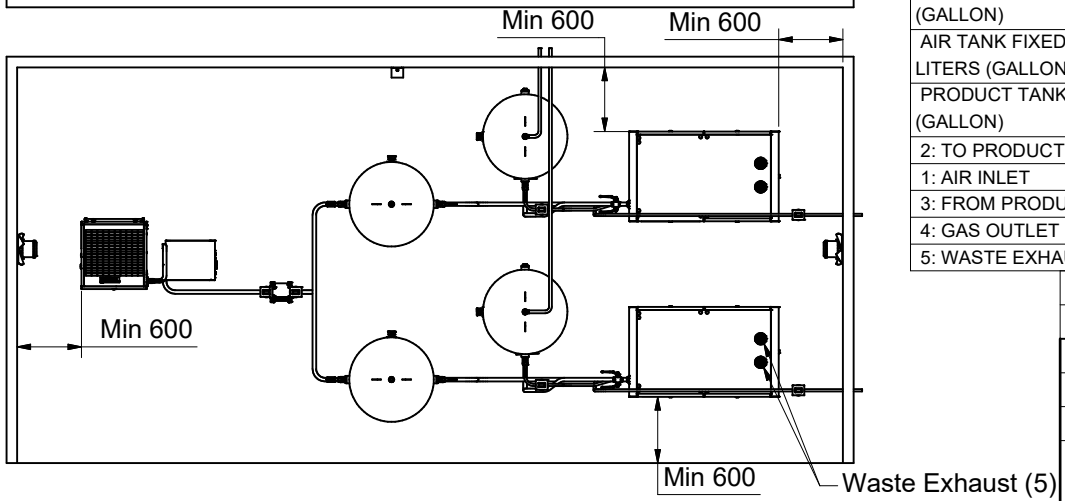

Notes:
- Consult the attached step by step instructions 9828530066-03 for further details.
- Inlet air requirement according to ISO 85731:2010 class 1-4-1.
- Diameter of pipe connections in table overview valid up to 5 meters pipe length.
- All equipment must be installed on a level floor suitable for taking the weight of the equipment.
- Allow a free space of minimum 600mm around the equipment.
- Isolate equipment and tanks by means of ball valves.

Tank sizes and pipe connections

MODEL	OGX110	OGX220	OGX330	OGX440	OGX550	OGX640	OGX850	OGX1070
AIR TANK VSD IN LITERS (GALLON)	270(45)	270(85)	500(130)	500(170)	1000(215)	1000(255)	1500(340)	2000(430)
AIR TANK FIXED SPEED IN LITERS (GALLON)	270(60)	500(120)	500(180)	1000(240)	1000(300)	1500(360)	2000(480)	3000(600)
PRODUCT TANK IN LITERS (GALLON)	270(45)	270(85)	500(130)	500(170)	1000(215)	1000(255)	1500(340)	2000(430)
2: TO PRODUCT TANK	G1/2"	G1/2"	G1"	G1"	G1"	G1 1/4"	G1 1/4"	G1 1/4"
1: AIR INLET	G1/2"	G1/2"	G1"	G1"	G1"	G1 1/4"	G1 1/4"	G1 1/4"
3: FROM PRODUCT TANK	G1/4"	G1/4"	G1/2"	G1/2"	G1/2"	G1/2"	G1/2"	G1/2"
4: GAS OUTLET	G1/4"	G1/4"	G1/2"	G1/2"	G1/2"	G1/2"	G1/2"	G1/2"
5: WASTE EXHAUST	Ø80mm	Ø80mm	2xØ80mm	2xØ80mm	2xØ80mm	3xØ80mm	3xØ80mm	3xØ80mm

Tolerances, if not indicated, according to:

STANDARD CLASS

Name	DIMENS. INSTALL.	PARALLEL OGX GENERATORS	Confidentiality Class acc. to 1102 K
Material	Not applicable		Internal
Treatment	Not Applicable		INV

nano PURIFICATION SOLUTIONS	Scale 1 : 50	Family	A3	Compare	Drawing owner API
	Drawn by INEBM	Blank nr.		Replaces	
STATUS	Version Drwg	Blank wt. Kg	Fini wt.	Designation	Sheet 1 / 1
Released	Des checked.	Prod checked.	Approved.	Date 27/07/2022	9828530066-02

Ed	Position	Modified from	Date	Intr./Appd.	Parent 3D model	Ed . Version 3D
1					9828530066-M1	02.01

All materials supplied are in compliance with the requirements of the List of Prohibited Substances

CONFIDENTIAL:
This document is our properety and shall not without our permission be altered, copied, used for manufacturing or communicated to any other person or company.