USER GUIDE

Heatless Desiccant Air Dryers

D2

17-100-0850 Rev. 01

nano

www.nano-purification.com

About Us

Experience.

Our team is comprised of and supported by individuals spanning all disciplines from research & development, engineering & manufacturing, marketing & sales and service & support. Our backgrounds are in air and gas purification and our experience in this field spans a wide range of industries. We combine this knowledge and experience to ensure our products and services are designed and provided to meet the objectives and expectations of your - our customer.

Customer.

We recognize that our customers are not only our valuable distribution partners who sell and support our products or the machine builders who depend on them as protection for their equipment. They are the contractors who install them, the manufacturers who use them in their processes and the service people who maintain them. At nano, we have developed our products, packaging and support materials to ensure they exceed all our customers' expectations.

Service.

At nano, we recognize that world-class customer service is the most important component to any successful business. Your business needs to exceed your customers' expectations to stand out from your competitors and our service must positively impact your business so you can be successful in doing so. Our commitment is simple... we will stand behind our products and ensure that our customer service is unrivaled in the industry.

Table of contents

1 Safety precautions 5

1.1 General safety 5

1.2 Warranty guidelines 5

2 General information 6

2.1 Manufacturer details and support 6

2.2 Document introduction 7

2.3 Intended use of the product 7

2.4 Product contents and packaging 7

2.5 Storage of spare parts 8

3 Product overview 9

3.1 Typical system layout 10

3.2 Process and instrumentation diagram 11

4 Technical data 12

4.1 Technical specifications 12

4.2 Flow rates 12

5 Installation 13

5.1 Product dimensions 13

5.2 Site location 13

5.3 Electrical installation 14

6 Controller.....15

6.1 Controller operation.....15

6.2 User connections/wiring.....17

7 Maintenance.....20

7.1 General warning.....20

7.2 Cleaning.....20

7.3 Daily checks.....20

7.4 Maintenance schedule.....21

8 Troubleshooting.....22

1 Safety precautions

1.1 General safety

No modifications must be made to the product. Any modifications may reduce the operational safety of the product and invalidate the manufacturer's warranty. This could potentially result in damage to the product and serious personal injury.

For your safety, when carrying out work on this product, all relevant national safety regulations must be followed regarding pressurized and electrical systems.

Only authorized, competent, and trained personnel are permitted to work on this product. This user guide is intended solely for such personnel and is to be used only as a reference; it should not replace conventional training.

This product can expose you to chemicals, including lead, which is known to the State of California to cause cancer and/or birth defects or other reproductive harm. For more information, visit www.PSServices.com.

1.2 Warranty guidelines

All products are supplied with a 2-year manufacturer's warranty from the date of purchase when installed and maintained according to the manufacturer's guidelines.

Only genuine service parts should be used, and no modifications made.

2 General information

This manual is copyrighted; all rights are reserved. It may not, in whole or in part, be copied, photocopied, reproduced, translated, or reduced to any electronic medium or machine-readable form without prior written consent from Air & Gas Solutions LLC. It may not be distributed through the internet or computer bulletin board systems without prior consent from Air & Gas Solutions LLC.

2.1 Manufacturer details and support

Reference	Details
	Nano-Purification Solutions Ltd. (Manufacturer)
Address:	Dukesway,Team Valley Trading Estate,Gateshead, NE11 0PZ, United Kingdom
Telephone:	+44 (0) 191 497 7700
Internet:	www.nano-purification.com
Email:	sales_uk@nano-purification.com

Reference	Details
	USA - Nano-Purification Solutions
Address:	5509 David Cox Road, Charlotte, NC 28269, USA
Telephone:	+1 (704) 897-2182
Internet:	www.nano-purification.com
Email:	support@nano-purification.com

Reference	Details
	USA - Nano-Purification Solutions
Address:	323 Crisp Circle, Maryville, Tennessee, USA
Telephone:	+1 (704) 897-2182
Internet:	www.nano-purification.com
Email:	support@nano-purification.com

Reference	Details
	Canada - Nano-Purification Solutions
Address:	7 Petrie Street, St. Catharines, Ontario, L2P 3J6, Canada
Telephone:	+1 (905) 684-6260
Internet:	www.nano-purification.com
Email:	canadasupport@nano-purification.com

Reference	Details
	Singapore - Nano-Purification Solutions

Reference	Details
Address:	Singapore, Singapore
Telephone:	+65 6748 7988
Internet:	www.nano-purification.com
Email:	sales.asia@nano-purification.com

CAUTION

Indicate any situation or operation that may result in potential damage to the product, injury to the user, or render the product unsafe.

NOTE

Highlight important sections of information where particular care and attention should be given.

2.2 Document introduction

This manual provides factory-prescribed installation and maintenance procedures for the heatless desiccant air dryer. The procedures illustrated in this document are to be performed only by authorized personnel. For further information regarding the procedures outlined in this document, contact the manufacturer before proceeding.

Be sure to read this document carefully before attempting to install or operate the product. This document should be permanently available at the product installation site.

2.3 Intended use of the product

The product is exclusively intended for the treatment of compressed air that is free from bulk water, oil, and solid matter.

The product should be located within a building and protected from extreme conditions and weather. The product must be operated only in accordance with the data on the rating plate. Any operations that do not comply with those stated on the product rating label will render the warranty void.

2.4 Product contents and packaging

When ordering a Series 2 desiccant air dryer, you will receive the following:

- 1 x dryer support base and box cover
- 1 x Series 2 compressed air dryer
- 1 x user guide
- 1 x declaration of conformity

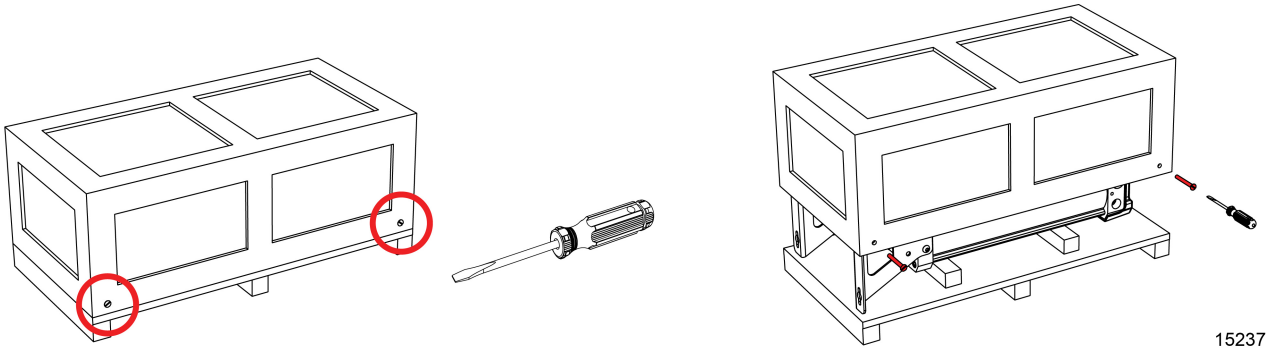

2.5 Storage of spare parts

To ensure the longevity and optimal performance of the product, proper storage of spare parts is crucial. Please adhere to the following guidelines for storing spare parts for this product.

1. Environment: Spare parts should be stored in a non-humid environment. If air conditioning is not available, ensure the storage area is well-ventilated to prevent moisture accumulation.
2. Protection from Sunlight: Parts should be kept away from direct sunlight. Exposure to ambient sunlight can degrade certain components and compromise their functionality.
3. Desiccant Storage: Desiccant cartridges should be stored in an adequate storage facility. Even with proper storage, desiccants have an optimal lifespan of approximately 12 to 18 months. It is important to monitor and replace desiccants within this timeframe to maintain effective performance.

By following these storage recommendations, you will help ensure that the parts remain in good condition and function effectively when needed.

3 Product overview

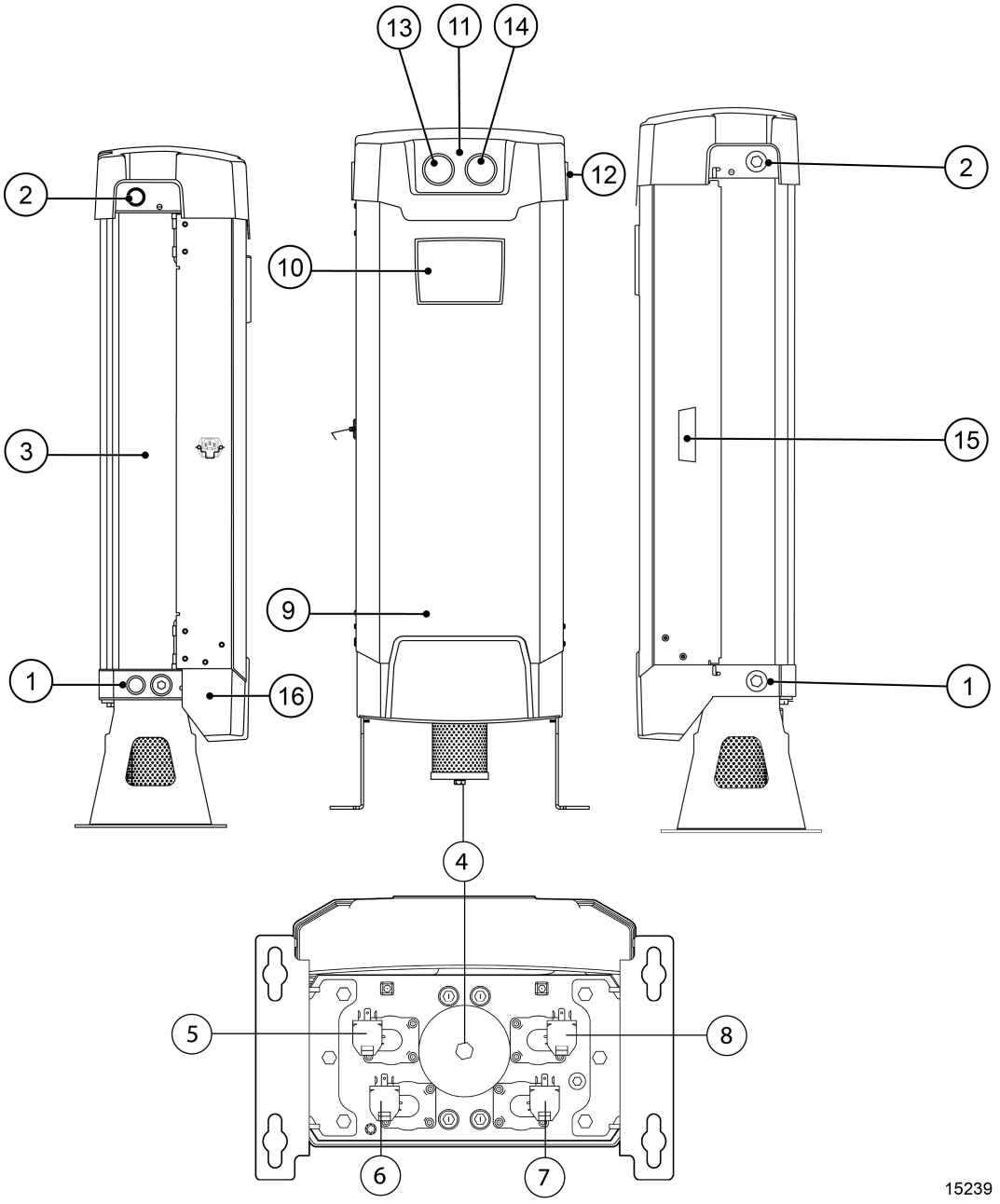

Reference	Description
1	Compressed air inlet
2	Compressed air outlet
3	Column
4	Exhaust silencer
5	Exhaust valve A
6	Inlet valve A
7	Inlet valve B
8	Exhaust valve B
9	Shroud

Reference	Description
10	Control panel display
11	Top cover
12	Shroud latches
13	Column gauge A
14	Column gauge B
15	Enclosure handle/lock
16	Bottom cover

3.1 Typical system layout

WARNING

It is essential that the system into which the product is installed is fitted with a pressure relief device. This device should be installed between the compressor and the unit.

WARNING

Inlet valves have a single direction of flow. Any reverse flow through these valves can cause irreparable damage to the valve diaphragms.

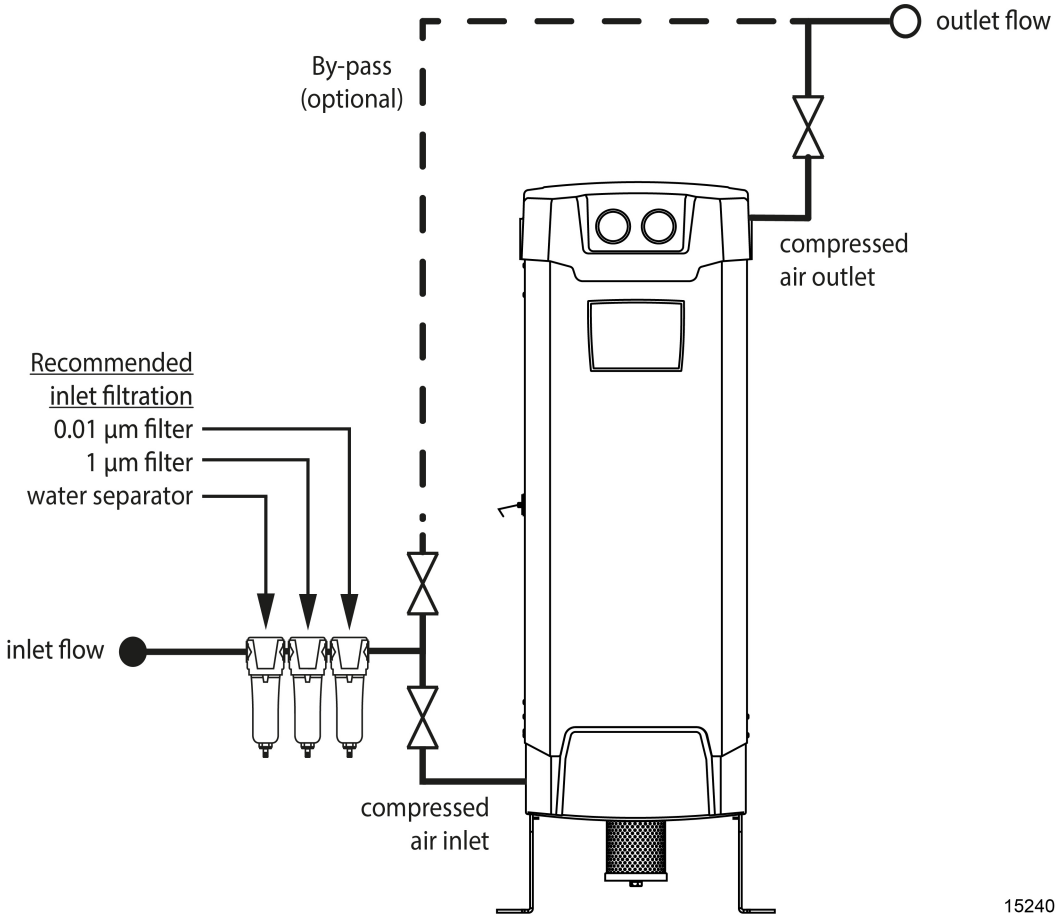

3.2 Process and instrumentation diagram

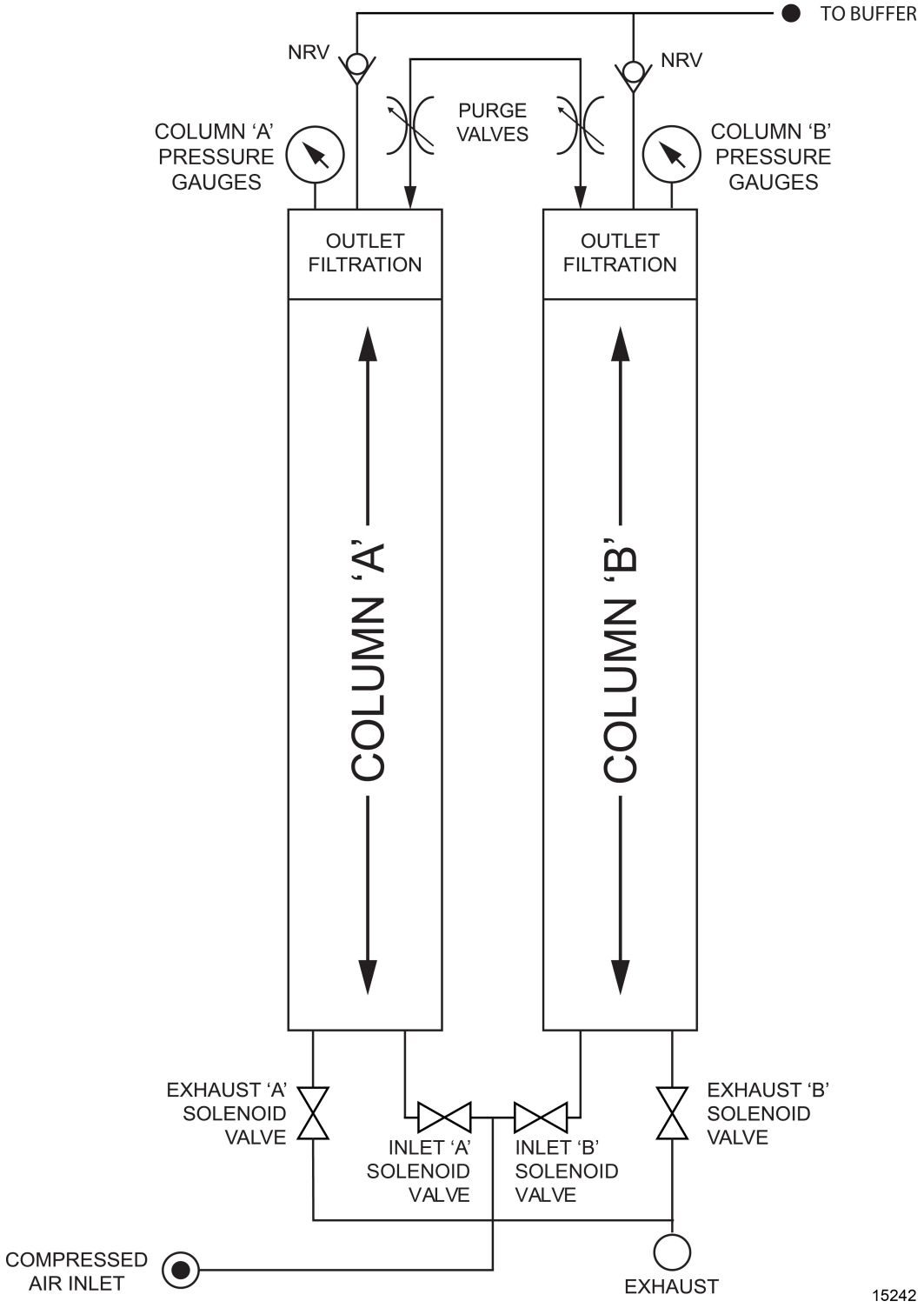

4 Technical data

4.1 Technical specifications

Characteristics	Standard	Options
Maximum water content (ISO class)	Class 2: -40 °C (-40 °F) pdp	Class 1: -70° C (-94 °F) pdp
Minimum operating pressure	4 barg (58 psig)	-
Maximum operating pressure	10 barg (174 psig)	16 barg (232 psig)
Recommended operating temp range	1.5 to 35 °C (35 to 95 °F)	-
Design operating temperature range	1.5 to 50 °C (35 to 122 °F)	-
Power supply requirements	100-240 V AC at 50-60 Hz	24 V DC
Consult the rating label; operating parameters may differ.		

4.2 Flow rates

Model	Inlet flow rate		Connections	
	Nm^3/hr	scfm	Inlet	Outlet
NDL-060N	58	34.1	1” BSPP or NPT	1” BSPP or NPT
NDL-070N	70	41.2		
NDL-080N	90	52.9		
NDL-090N	112	65.9		
NDL-100N	150	88.2		
NDL-110N	180	105.9		
NDL-120N	224	131.8		
NDL-130N	301	177.1		

Inlet pressure correction factors													
barg	4	5	6	7	8	9	10	11	12	13	14	15	16
psig	58	72	87	101	116	130	145	159	174	188	203	217	232
Correction factor	0.63	0.75	0.88	1	1.13	1.25	1.38	1.50	1.63	1.75	1.88	2.01	2.13

Inlet temperature correction factors										
°C	5	10	15	20	25	30	35	40	45	50
°F	41	50	59	68	77	86	95	104	113	122
Correction factor	0.8	0.9	0.94	1	1	0.98	0.95	0.9	0.8	0.7

5 Installation

5.1 Product dimensions

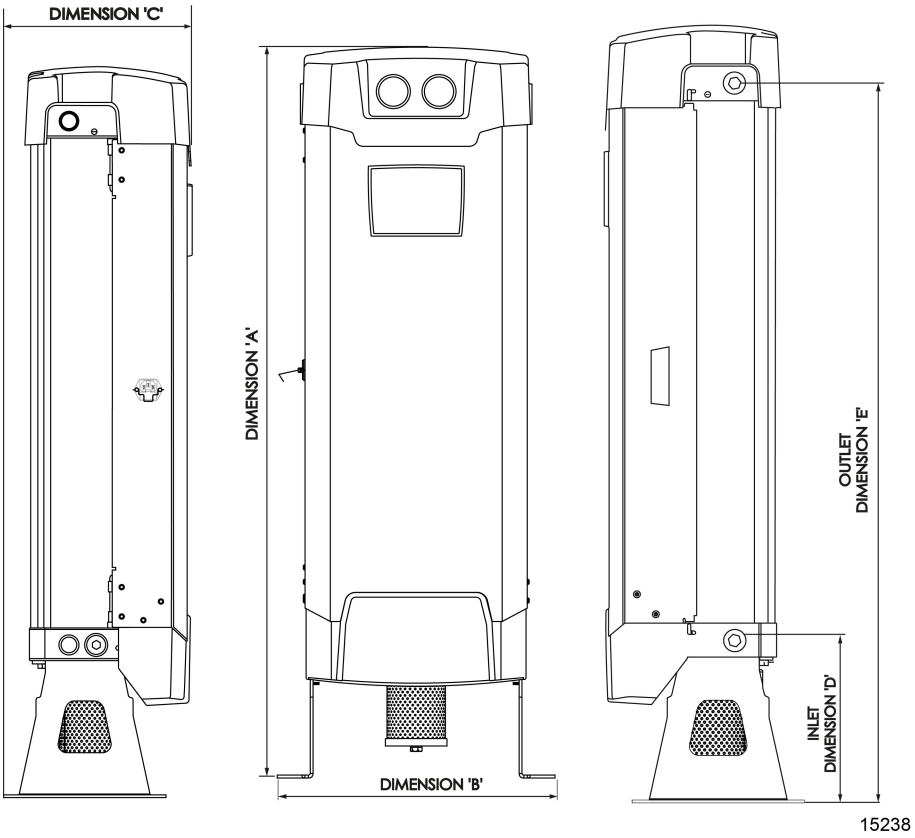

Model		A		B		C		D		E	Weight	
	mm	inches	mm	inches	mm	inches	mm	inches	mm	inches	kg	lbs
NDL-060N	764	30.1	426	16.8	288	11.3	234	9.2	681	26.8	40	88
NDL-070N	764	30.1	426	16.8	288	11.3	234	9.2	681	26.8	40	88
NDL-080N	944	37.2	426	16.8	288	11.3	234	9.2	861	33.9	54	119
NDL-090N	944	37.2	426	16.8	288	11.3	234	9.2	861	33.9	54	119
NDL-100N	1119	44.1	426	16.8	288	11.3	234	9.2	1036	40.8	64	141
NDL-110N	1269	50.0	426	16.8	288	11.3	234	9.2	1186	46.7	76	167
NDL-120N	1519	59.8	426	16.8	288	11.3	234	9.2	1436	56.5	91	200
NDL-130N	1869	73.6	426	16.8	288	11.3	234	9.2	1786	70.3	112	247

Table 1: Dimensions

5.2 Site location

When selecting an installation site for the product, ensure the following conditions are met:

- The installation site should be located indoors on a flat surface protected from the weather and other harmful conditions.

- The ambient temperature must not drop below 1.5 °C (34.7 °F) or exceed 50 °C (122 °F).
- The installation site should be level and able to support the weight of the product.
- Ensure sufficient space around the product to allow access for operation and maintenance.
- Consider the noise generated by the product while in use when determining the location.

5.3 Electrical installation

To install the mains power, connect the mains power cable to the IEC plug (see figure below). Then insert the IEC plug into the socket as shown below.

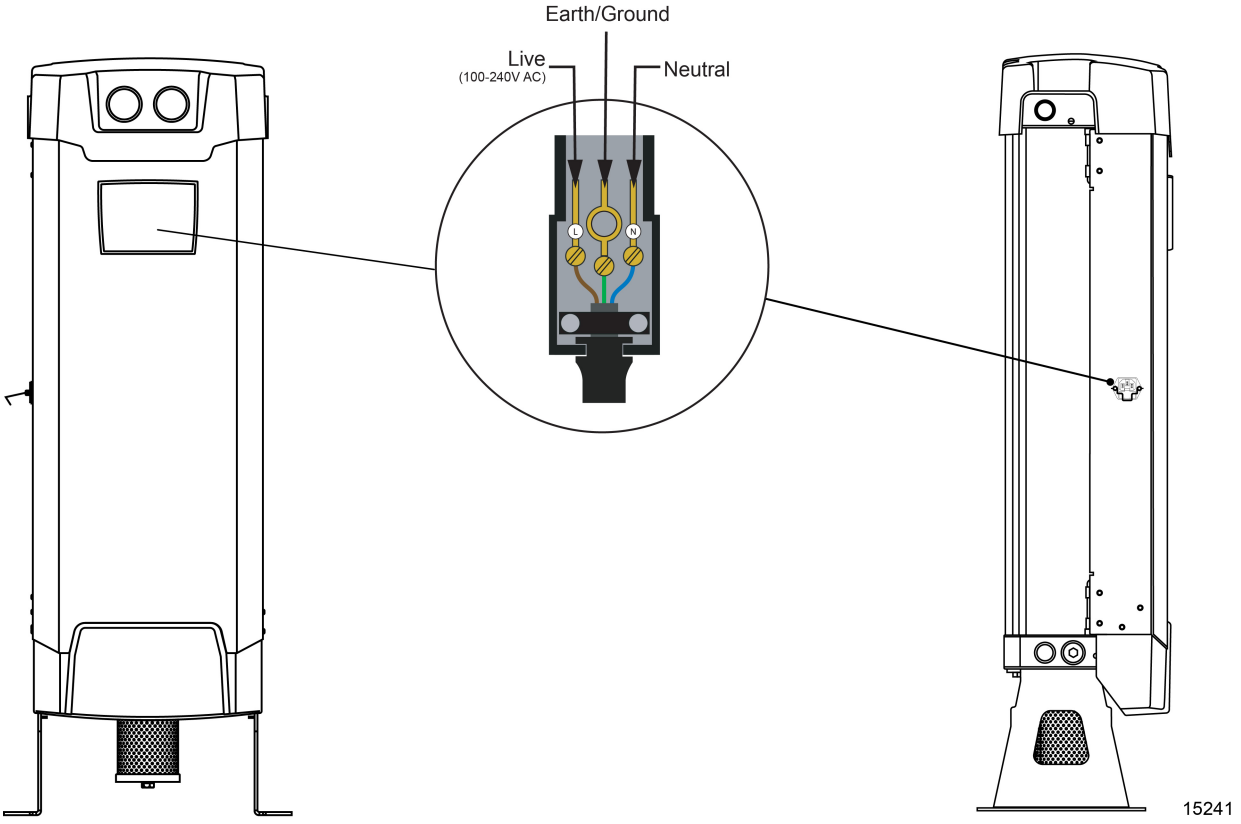

Figure 1: Electrical connections

WARNING

Ensure the mains power is isolated or switched off prior to servicing the product. Under no circumstances should the controller be used without being fitted to the product. This product must be grounded and be connected to a grounded, metallic, permanent wiring system or an equipment grounding terminal or lead.

6 Controller

6.1 Controller operation

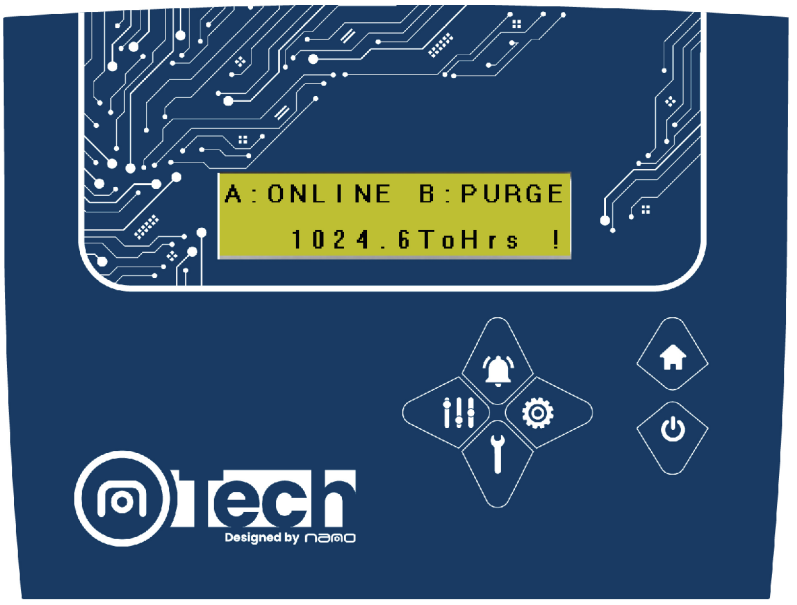

15249

6.1.1 Home page layout

Display running hours and fitted options data (cycle every 5 seconds).

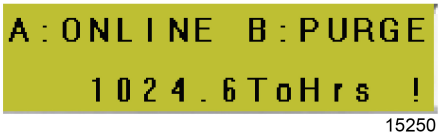

15250

Figure 2: Display machine status

Above status display if an alarm is detected.

6.1.2 Icons/keys

Icons	Description	Function
15251	Start/Stop	Hold for 2 seconds to start or stop the machine. Follow start and stop procedures.
15252	Home	Press at any point to return to the home display.
15253	Alarms/Up key	From the home display, press to access active alarms. Increase the value of the setpoint/parameter. (Accelerates if held).

Icons	Description	Function
15254	Setpoints/Right key	From the home display, press to access setpoints (password protected). Cycle to the next setpoint/ parameter.
15255	Parameters/Left key	From the home display, press to access parameters (password protected). Cycle to the previous setpoint/ parameter.
15256	Service Menu/Down key	From the home display, press to access the service menu. Decrease the value of the setpoint/parameter. (Accelerates if held).

6.1.3 Settings/parameters adjustment

To alter machine settings:

1. Navigate to settings using the settings icon.
2. Input the passcode (3644) using the left/right keys and up/down keys.
3. Navigate to the relevant setpoint using the left/right keys.
4. Alter the setpoint to the desired level using the up/down keys.

ES setpoint > **Dewpoint alarm** > **Inlet pressure alarm** > **Inlet over temperature** > **Inlet under temperature**

To alter machine parameters:

1. Navigate to parameters using the parameters icon.
2. Input the passcode (3644) using the left/right keys and up/down keys.
3. Navigate to the relevant parameter using the left/right keys.
4. Alter the parameter to the desired setting using the up/down keys.

PDP sensor > **Pressure sensor** > **Temperature sensor** > **Temperature mode** > **Pressure mode**

6.1.4 Settings/parameters page

WARNING

This is only an illustrative example.

Settings and alarms are adjustable through the display panel.

6.1.5 Alarms page

To view active alarms, press the alarm bell key from the home display:

1. Active alarms will cycle every 5 seconds on this page.
2. An alarm will automatically reset and be removed from the list upon the alarm condition being removed.

6.1.6 Service menu

To view the service menu, press the spanner key from the home display:

1. The service menu has three options that can be accessed with the relevant arrow key.
2. Ethernet settings - Up key
3. Service reset - Down key
4. Software version - Right key (also displays during power-up sequence)

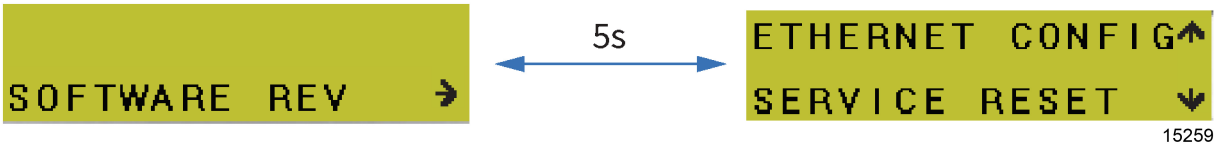

6.2 User connections/wiring

To gain access to the remote start/stop function:

1. Remove the screws from the top cover and lift it away from the product.
2. Locate and operate the two latches to open the shroud; this will expose the controller.
3. Remove the link at I0 and connect it to I2 (unused input).
4. Connect a 0V wire from the blue common block via an external control relay to I0.
5. Energizing the relay will close the circuit and remote start the product; breaking this circuit will stop the product.
6. The controller will display 'Standby' when the remote start/stop is an open circuit.

To gain access to the alarm output function:

1. Connect either a 24 V DC or 110/240 V AC through O5. Under no circumstances should an AC voltage be connected to any other terminals of the PLC.
2. Output maximum rating is 250 V AC / 24 V DC 5A (resistive load).

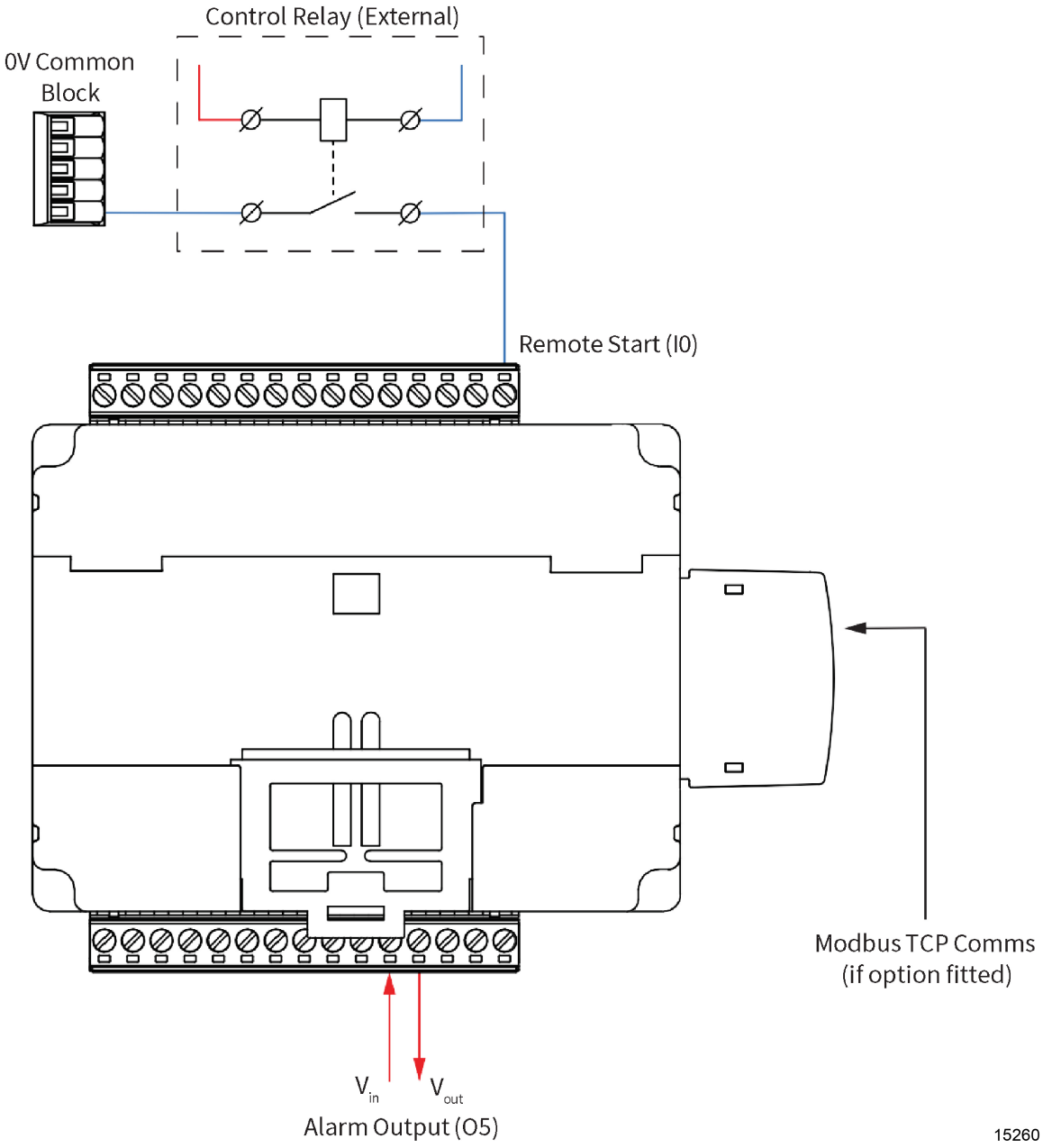

6.2.1 Start-up procedure

To start up the machine:

- 1. Ensure all pipework is connected as per the typical layout.
  2. The product is connected to a power supply as stated on the product rating label.
  3. Ensure the inlet air pressure is within limits as stated on the product rating label.
  4. Ensure the inlet air temperature is within limits as stated on the product rating label.
  5. Slowly open the inlet air flow and allow the product to pressurize.
  6. Turn on the power. The product will go through an initialization sequence and then display the home page.
  7. If the machine was not stopped via the controller before the last shutdown, the machine will automatically resume from the previous cycle.

8. If the machine displays "Offline", press and hold the Start/Stop button for more than 2 seconds. The machine will start and resume from the previous cycle.

WARNING

Do not allow the unit to flow air unless it is switched on and cycling. The resulting effect could be desiccant contamination, requiring a desiccant service.

6.2.2 Shutdown procedure

To shut down the machine:

1. Close both the inlet and outlet valves to ensure the product is completely isolated.
2. Press and hold the start/stop button for more than 2 seconds. The machine should start a shutdown sequence.
3. The machine will continue to cycle for 30 seconds to allow it to fully depressurize.
4. When the shutdown sequence has completed, the display will show "Offline".
5. When fully depressurized, the "clicking" of the exhaust valves will be heard, but no air will be exhausted.

WARNING

The product will still be pressurized. To depressurize the product, ensure that it is isolated from the compressed air supply source.

6.2.3 Shutdown page

15261

7 Maintenance

7.1 General warning

WARNING

Maintenance operations should only be conducted once the system has been shut down and is fully depressurized. All operations should be carried out by authorized and suitably trained personnel.

- **Isolate the product from the compressed air and electrical supply, ensuring the system is in a safe condition for maintenance.**
- **All connections must be removed with care, paying particular attention to areas that become pressurized.**
- **All seals removed during maintenance operations must be replaced with new seals.**
- **Only certified and approved replacement parts should be used.**
- **Do not modify or adjust the control settings.**
- **Check all connections and sealing faces for cleanliness and secure seating prior to assembly.**
- **Ensure all components are re-fitted to the product before operation.**
- **Check all connections and sealing faces for leaks; if any are found, resolve the issue and check again.**
- **Ensure the unit is left operating in a safe working condition after the completion of maintenance.**

7.2 Cleaning

Clean the equipment with a damp cloth only and avoid excessive moisture around any electrical connections. If required, a mild detergent can be used. Do not use abrasives or solvents, as these may cause damage.

7.3 Daily checks

- Check the product for any signs of external damage.
- If the service alarm is active, the product must be serviced to ensure continued operation.
- Remove any loose dust or dirt from the product and clean all surfaces that appear to have attracted unwanted contaminants.
- Ensure the product is operating within the specifications.
- Always check all connections for leaks.
- Ensure all loose parts are removed or secured to the product before operation.

7.4 Maintenance schedule

Service	Year 1 (12 months)	Year 2 (24 months)	Year 3 (36 months)	Year 4 (48 months)	Year 5 (60 months)	Year 6 (72 months)	Year 7 (84 months)	Year 8 (96 months)
A	✔	✔	✔	✔	✔	✔	✔	✔
B		✔		✔		✔		✔
C				✔				✔
E (ES MODELS ONLY)	✔	✔	✔	✔	✔	✔	✔	✔

Table 2: Service plan

Service	Action
Service A	• Every 1 year (12 months) • Replace external exhaust silencer/muffler element. • Applicable to all models
Service B	• Every 2 year (24 months) • Replace desiccant cartridges. • Replace top manifold gasket seals. • Applicable to all models
Service C	• Every 4 year (48 months) • Replace exhaust valves. • Replace inlet valves. • Replace outlet valves. • Replace solenoid coils. • Applicable to all models
Service E	• Every 1 year (12 months) • Calibrate the dewpoint sensor. • Applicable to ES models only

NOTE

When contacting your service provider, be sure to provide the part number and serial number of your product.

8 Troubleshooting

Problem	Cause	Remedy
Poor dewpoint performance	Insufficient inlet pressure	4 barg (58 psig) minimum inlet pressure required to operate, if not, check and restore the system pressure.
	Electrical fault	Ensure the power is on and the product front panel is illuminated; check the product is cycling correctly.
	Moist or contaminated desiccant	Eliminate the cause of contamination, replace desiccant cartridges (do not re-use).
	Excessive inlet air temperature	Check against the technical specification.
	Insufficient purge air	Purge incorrectly adjusted, consult the service personnel to adjust settings (factory pre-set). Consult service technician to adjust as per site condition.
	Exhaust silencer blocked	Replace the exhaust silencer/muffler element.
Failure of product to cycle	Controller not functioning correctly	Ensure the controller is powered up, check the on screen column status to ensure it is powering the solenoid valves during operation.
	Insufficient inlet pressure	4 barg (58 psig) minimum inlet pressure required to operate, if not, check and restore the system pressure.
	Controller not illuminated	Check power supply to the product, check fuse and replace.
	Failure to de-pressurize when cycling	Solenoid valve not functioning correctly; if there is power to the coil, replace the valve. Refer the PLC display
	Outlet flow stops	Check the inlet air supply.
	Failure to initialize product	Switch off and restart the product. Ensure that the product is pressurized before powering up to allow the product to initialize before operation.
	Erratic air flow from exhaust	Faulty or damaged valves, carry out service.

Headquarters
United States
Charlotte, North Carolina
Phone: +1 704 897 2182
E-mail: support@airandgassolutions.com

United States
Maryville, Tennessee
Phone: +1 704 897 2182
E-mail: support@airandgassolutions.com

Canada
St. Catharines, Ontario
Phone: +1 908 684 6266
E-mail: canadasupport@airandgassolutions.com

Singapore
Singapore
Phone: +65 6748 7988
E-mail: sales.asia@nano-purification.com

United Kingdom
Gateshead, Tyne and Wear
Phone: +44 (0) 191 797 7700
E-mail: sales_uk@nano-purification.com